Specifications

Description	Specifications	Limit
General		
Type	In-line, Double Overhead Camshaft	
Number of cylinder	4	
Bore	86mm (3.385in) / 88mm (3.464in)	
Stroke	86mm (3.385in) / 97mm (3.819in.)	
Total displacement	1998cc (121.92in) / 2359cc (143.90cu.in.)	
Compression ratio	10.5	
Firing order	1-3-4-2	
Valve timing		
Intake valve		
Opens (ATDC / BTDC)	ATDC 7° ~ BTDC 38°	
Closes (ABDC)	ABDC 67° ~ 22°	
Exhaust		
Opens (BBDC)	BBDC 44° ~ 4°	
Closes (ATDC)	ATDC 0° ~ 40°	
Valve		
Valve length		
Intake	113.18mm (4.4559in.)	112.93mm (4.4460in)
Exhaust	105.84mm (4.1669in.)	105.59mm (4.1570in)
Stem O.D.		
Intake	5.465 ~ 5.480mm (0.2151 ~ 0.2157in.)	
Exhaust	5.458 ~ 5.470mm (0.2149 ~ 0.2153in.)	
Face angle	45.25° ~ 45.75°	
Margin		
Intake	1.02mm (0.0401in.)	
Exhaust	1.09mm (0.0429in.)	
Valve stem to valve guide clearance		
Intake	0.020 ~ 0.047mm (0.00078 ~ 0.00185in.)	0.07mm (0.00275in.)
Exhaust	0.030 ~ 0.054mm (0.00118 ~ 0.00212in.)	0.09mm (0.00354in.)
Valve guide		
Length		
Intake	43.8 ~ 44.2mm (1.7244 ~ 1.7401in.)	
Exhaust	43.8 ~ 44.2mm (1.7244 ~ 1.7401in.)	
Valve seat		
Width of seat contact		
Intake	1.16 ~ 1.46mm (0.0457 ~ 0.0575in.)	
Exhaust	1.35 ~ 1.65mm (0.0531 ~ 0.0649in.)	
Seat angle	44.75° ~ 45.10°	

mcx30.com

Free length		47.44mm (1.8677in.)	
Load		19.0 ± 0.6kg/35.0mm (41.88 ± 1.32lb/1.3779in.)	
Squarences		39.8 ± 1.2kg/26.0mm (87.74 ± 2.64lb/1.0236in.)	
		1.5° MAX.	
Valve clearance			
Cold (20°C[68°F])			
Intake		0.17 ~ 0.23mm (0.0067 ~ 0.0090in.)	0.10 ~ 0.30mm (0.0039 ~ 0.0118in.)
Exhaust		0.27 ~ 0.33mm (0.0106 ~ 0.0129in,)	0.20 ~ 0.40mm (0.0078 ~ 0.0157in.)
Cylinder head			
Flatness of gasket surface		Max. 0.05mm (0.0019in.)	
Flatness of manifold mounting surface		Max. 0.10mm (0.0039in.)	
Cylinder block			
Cylinder bore [2.0 / 2.4]		86.00 ~ 86.03mm (3.3858 ~ 3.3870in.) / 88.00 ~ 88.03mm (3.4645 ~ 3.4657in.)	
Out-of-round and taper of cylinder bore		Less than 0.05mm (0.0019in.)	
Clearance with piston (To set limits to new parts)		0.015 ~ 0.035mm (0.0005 ~ 0.0013in.)	
Piston			
O.D (To set limits to new parts) [2.0 / 2.4]		85.975 ~ 86.0050mm (3.3848 ~ 3.3860in.) / 87.975 ~ 88.005mm (3.4635 ~ 3.4647in.)	
Ring groove width			
No.1		1.235 ~ 1.250mm (0.0486 ~ 0.0492in.)	1.26mm (0.0496in.)
No.2		1.230 ~ 1.250mm (0.0484 ~ 0.0492in.)	1.26mm (0.0496in.)
Oil ring		2.01 ~ 2.03mm (0.0791 ~ 0.0799in.)	2.05mm (0.0807in.)
Piston ring			
Side clearance			
No.1		0.05 ~ 0.08mm (0.0019 ~ 0.0031in.)	0.1mm (0.004in.)
No.2		0.04 ~ 0.08mm (0.0015 ~ 0.0031in.)	0.1mm (0.004in.)
Oil ring		0.06 ~ 0.15mm (0.0023 ~ 0.0059in.)	0.2mm (0.008in.)
End gap			
No.1		0.15 ~ 0.30mm (0.0059 ~ 0.0118in.)	0.6mm (0.0236in.)
No.2		0.37 ~ 0.52mm (0.0145 ~ 0.0204in.)	0.7mm (0.0275in.)
Oil ring side rail		0.20 ~ 0.70mm (0.0078 ~ 0.0275in.)	0.8mm (0.0315in.)
Connecting rod			
Bend		0.05mm (0.0020in.) or less	
Twist		0.1mm (0.004in.) or less	
Connecting rod big end to crankshaft side clearance		0.100 ~ 0.250mm (0.0039 ~ 0.010in.)	0.35mm (0.0138in.)
Connecting rod bearing			
Oil clearance (To seat limits to new parts)		0.031 ~ 0.045mm (0.0012 ~ 0.0017in.)	0.05mm (0.0078in.)
Camshaft			
	Intake	44.20mm (1.7401in.)	

mcx30.com

Journal O.D	Intake	No.1	¢ 30mm (1.1811in.)	
		No.2, 3, 4, 5	¢ 24mm (0.9449in.)	
	Exhaust	No.1	¢ 36mm (1.4173in.)	
		No.2, 3, 4, 5	¢ 24mm (0.9449in.)	
Bearing oil clearance	Intake	No.1	0.022 ~ 0.057mm (0.0008 ~ 0.0022in.)	0.09mm (0.0035in.)
		No.2, 3, 4, 5	0.045 ~ 0.082mm (0.0017 ~ 0.0032in.)	0.12mm (0.0047in.)
	Exhaust	No.1	0 ~ 0.032mm (0 ~ 0.0012in.)	
		No.2, 3, 4, 5	0.045 ~ 0.082mm (0.0017 ~ 0.0032in.)	0.12mm (0.0047in.)
End play			0.04 ~ 0.16mm (0.0015 ~ 0.0062in.)	0.20mm (0.0047in.)
Crankshaft				
Pin O.D.			47.954 ~ 47.972mm (1.8879 ~ 1.8886in.)	
Journal O.D.			51.942 ~ 51.960mm (2.0449 ~ 2.0456in.)	
End play			0.07 ~ 0.25mm (0.0027 ~ 0.0098in.)	
Crankshaft bearing				
Oil clearance			0.020 ~ 0.038mm (0.0007 ~ 0.0014in.)	
Cooling method			Water-cooled, pressurized. Forced circulation with water pump	
Radiator				
Type			Pressurized corrugated fin type	
Radiator cap				
Main valve opening pressure			83 ~ 110kpa (12 ~ 16psi, 0.83 ~ 1.1kg/cm²)	
Vacuum valve opening pressure			-7kpa (-100psi, -0.07kg/cm²) or less	
Thermostat				
Type			Wax pellet type with jiggle valve	
Valve opening temperature			82 ± 1.5°C (177 ± 1.8°F)	
Full-opening temperature			95°C (201°F)	
Coolant pump			Centrifugal type impeller	
Drive belt				
Type			V-ribbed belt	
Engine oil				
Oil quantity	Total [2.0 / 2.4]		4.7L (4.97US qt, 4.13Imp qt) / 5.5L (5.81US qt, 4.84Imp qt)	When replacing a short engine or a block assembly
	Oil pan [2.0 / 2.4]		3.8L (4.01US qt, 3.34Imp qt) / 4.2L (4.44US qt, 3.69Imp qt)	
	Drain and refill [2.0 / 2.4]		4.1L (4.33US qt, 3.61Imp qt) / 4.6L (4.86US qt, 4.05Imp qt)	Including oil filter
Oil grade	Recommendation		5W-20/GF4&SM	If not available, refer to the recommended API or ILSAC classification and SAE viscosity number.
	Classification		API SL, SM or above ILSAC GF3, GF4 or above	Satisfy the requirement of the API or ILSAC classification.

mcx30.com

	SAE viscosity grade	Recommended SAE viscosity number	System"
Oil pressure (at 1000rpm) [2.0 / 2.4]		108kPa(1.1kg/cm², 15.6psi) or above / 147kPa(1.5kg/cm², 21.3psi) or above	Oil temperature in oil pan : 110±2°C (230 ± 36°F)

Tightening Torques

Item	N.m	kgf.m	lb-ft
Ladder frame bolt	[8.8~9.8] + [17.7~20.6] + [27.5~31.4]	[0.9~1.0] + [1.8~2.1] + [2.8~3.2]	[6.5~7.2] + [13.0~15.2] + [20.3~23.1]
Balance shaft module bolt [2.4L Engine only]	[22.5~26.5] + [103~ 107°]	[2.3~2.7] + [103~ 107°]	[18.6~19.5] + [103~ 107°]
Oil pump bolt [2.0L Engine only]	[7.8~11.8] + [17.7~21.6] + [27.5~31.4]	[0.8~1.2] + [1.8~2.2] + [2.8~3.2]	[5.8~8.7] + [13.0~15.9] + [20.3~23.1]
Timing chain cover bolt (8X28)	18.6 ~ 22.5	1.9 ~ 2.3	13.7 ~ 16.6
Timing chain cover bolt (6X25)	7.8 ~ 9.8	0.8 ~ 1.0	5.8 ~ 7.2
Timing chain cover bolt (10X45)	39.2 ~ 44.1	4.0 ~ 4.5	28.9 ~ 32.5
Timing chain cover bolt (10X40)	39.2 ~ 44.1	4.0 ~ 4.5	28.9 ~ 32.5
Oil pan bolt (M6)	9.8 ~ 11.8	1.0 ~ 1.2	7.2 ~ 8.7
Oil pan bolt (M9)	30.4 ~ 34.3	3.1 ~ 3.5	22.4 ~ 25.3
Camshaft bearing cap bolt (M6)	[5.9] + [10.8~12.7]	[0.6] + [1.1~1.3]	[4.3] + [7.9~9.4]
Camshaft bearing cap bolt (M8)	[14.7] + [27.4~31.4]	[1.5] + [2.8~3.2]	[10.8] + [20.3~23.1]
Cylinder head bolt	[32.4~36.3] + [90~95°] + [90~95°]	[3.3~3.7] + [90~95°] + [90~95°]	[23.9~26.8] + [90~95°] + [90~95°]
Engine hanger bolt	27.5 ~ 31.4	2.8 ~ 3.2	20.3 ~ 23.1
Cylinder head cover bolt	[3.9~5.9] + [7.8~9.8]	[0.4~0.6] + [0.8~1.0]	[2.9~4.3] + [5.8~7.2]
Crankshaft pulley bolt	166.6 ~ 176.4	17.0 ~ 18.0	122.9 ~ 130.1
Connecting rod bearing cap bolt	[17.7~21.6] + [88~92°]	[1.8~2.2] + [88~92°]	[13.0~15.9] + [88~92°]
Main bearing cap bolt	[14.7] + [27.5~31.4] + [120~125°]	[1.5] + [2.8~3.2] + [120~125°]	[10.8] + [20.3~23.1] + [120~125°]
Flywheel bolt	117.6 ~ 127.4	12.0 ~ 13.0	86.8 ~ 93.9
Drive plate bolt	117.6 ~ 127.4	12.0 ~ 13.0	86.8 ~ 93.9
Timing chain tensioner bolt	9.8 ~ 11.8	1.0 ~ 1.2	7.2 ~ 8.7
Timing chain tensioner arm bolt	9.8 ~ 11.8	1.0 ~ 1.2	7.2 ~ 8.7
Timing chain guide bolt	9.8 ~ 11.8	1.0 ~ 1.2	7.2 ~ 8.7
OCV bolt	9.8 ~ 11.8	1.0 ~ 1.2	7.2 ~ 8.7
CVVT bolt	53.9 ~ 63.7	5.5 ~ 6.5	39.7 ~ 47.0
BSM chain tensioner arm bolt [2.4L Engine only]	9.8 ~ 11.8	1.0 ~ 1.2	7.2 ~ 8.7
BSM chain guide bolt [2.4L Engine only]	9.8 ~ 11.8	1.0 ~ 1.2	7.2 ~ 8.7
BSM chain tensioner bolt [2.4L Engine only]	9.8 ~ 11.8	1.0 ~ 1.2	7.2 ~ 8.7
Oil pump chain guide bolt [2.0L Engine only]	9.8 ~ 11.8	1.0 ~ 1.2	7.2 ~ 8.7
Oil pump chain tensioner bolt [2.0L Engine only]	9.8 ~ 11.8	1.0 ~ 1.2	7.2 ~ 8.7
Oil cooler hose & pipe bolt [2.4L Engine only]	18.6 ~ 23.5	1.9 ~ 2.4	13.7 ~ 17.4

mcx30.com

A/C compressor bracket bolt	19.6 ~ 23.5	2.0 ~ 2.4	14.5 ~ 17.4
Tensioner assy intergrated bracket bolt	39.2 ~ 44.1	4.0 ~ 4.5	28.9 ~ 32.5
Water temp. control nut	18.6 ~ 23.5	1.9 ~ 2.4	13.7 ~ 17.4
Water temp. control bolt	14.7 ~ 19.6	1.5 ~ 2.0	10.8 ~ 14.5
Water inlet pipe bolt	9.8 ~ 11.8	1.0 ~ 1.2	7.2 ~ 8.7
Oil level gauge assembly bolt	7.8 ~ 11.8	0.8 ~ 1.2	5.8 ~ 8.7
Ignition coil bolt	3.9 ~ 5.9	0.4 ~ 0.6	2.9 ~ 4.3
Intake manifold bolt	18.6 ~ 23.5	1.9 ~ 2.4	13.7 ~ 17.4
Intake manifold nut	18.6 ~ 23.5	1.9 ~ 2.4	13.7 ~ 17.4
Intake manifold stay bolt	18.6 ~ 23.5	1.9 ~ 2.4	13.7 ~ 17.4
Exhaust manifold heat protector bolt	7.8 ~ 11.8	0.8 ~ 1.2	5.8 ~ 8.7
Exhaust manifold nut	49.0 ~ 53.9	5.0 ~ 5.5	36.2 ~ 39.8
Exhaust manifold stay bolt (M8)	18.6 ~ 27.5	1.9 ~ 2.8	13.7 ~ 20.3
Exhaust manifold stay bolt (M10)	51.9 ~ 57.9	5.3 ~ 5.9	38.3 ~ 42.7
Muffler bolt	39.2 ~ 58.8	4.0 ~ 6.0	28.9 ~ 43.4
Engine cover mounting bracket bolt	9.8 ~ 11.8	1.0 ~ 1.2	7.2 ~ 8.7
Crankshaft position sensor bolt	3.9 ~ 5.9	0.4 ~ 0.6	2.9 ~ 4.3
Oxygen sensor	44.1 ~ 49.0	4.5 ~ 5.0	32.5 ~ 36.1
Knock sensor	18.6 ~ 23.5	1.9 ~ 2.4	13.7 ~ 17.4
Camshaft position sensor	9.8 ~ 11.8	1.0 ~ 1.2	7.2 ~ 8.7
Oil pressure switch	7.8 ~ 11.8	0.8 ~ 1.2	5.8 ~ 8.7
Oil filter	11.8 ~ 15.7	1.2 ~ 1.6	8.7 ~ 11.6

Engine Mechanical System > General Information > Repair procedures

Compression Pressure Inspection

NOTE

If the there is lack of power, excessive oil consumption or poor fuel economy, measure the compression pressure.

1. Warm up and stop engine.
   Allow the engine to warm up to normal operating temperature.
2. Disconnect the injector connectors (A) and ignition coil connectors (B).

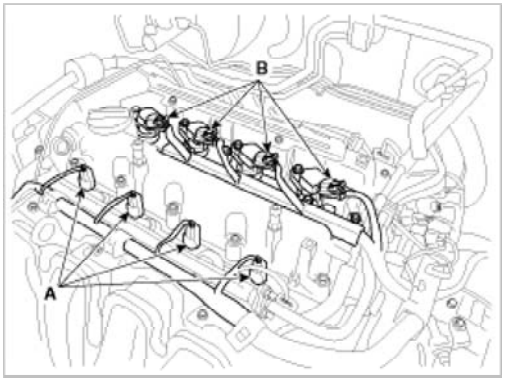

3. Remove ignition coils (A).

mcx30.com

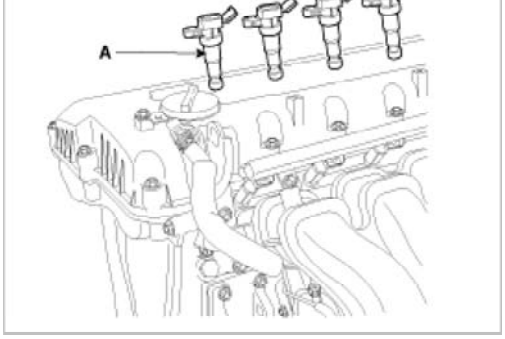

4. Remove spark plugs.
   Using a 16mm plug wrench, remove the 4 spark plugs.
5. Check cylinder compression pressure.
   A. Insert a compression gauge into the spark plug hole.

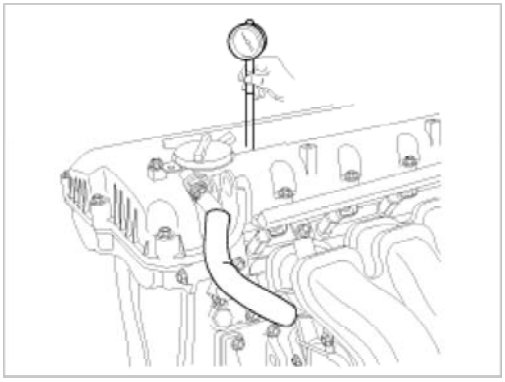

   B. Fully open the throttle.
   C. While cranking the engine, measure the compression pressure.

> **NOTE**
>
> Always use a fully charged battery to obtain engine speed of 200 rpm or more.

   D. Repeat steps (a) through (c) for each cylinder.

> **NOTE**
>
> This measurement must be done in as short a time as possible.

Compression pressure :
1,283kPa (13.0kgf/cm², 185psi)
Minimum pressure :
1,135kPa (11.5kgf/cm², 164psi)
Difference between each cylinder :
100kPa (1.0kgf/cm², 15psi) or less

   E. If the cylinder compression in 1 or more cylinders is low, pour a small amount of engine oil into the cylinder through the spark plug hole and repeat steps (a) through (c) for cylinders with low compression.
      - If adding oil helps the compression, it is likely that the piston rings and/or cylinder bore are worn or damaged.
      - If pressure stays low, a valve may be sticking or seating is improper, or there may be leakage past the gasket.
6. Reinstall spark plugs.
7. Install ignition coils.
8. Connect the injector connectors and ignition coil connectors.

Valve Clearance Inspection And Adjustment

> **NOTE**

mcx30.com

cylinder head is installed on the cylinder block.

1. Remove the cylinder head cover. (Refer to Timing system in this group)
2. Set No.1 cylinder to TDC/compression.
   A. Turn the crankshaft pulley and align its groove with the timing mark "T" of the lower timing chain cover.

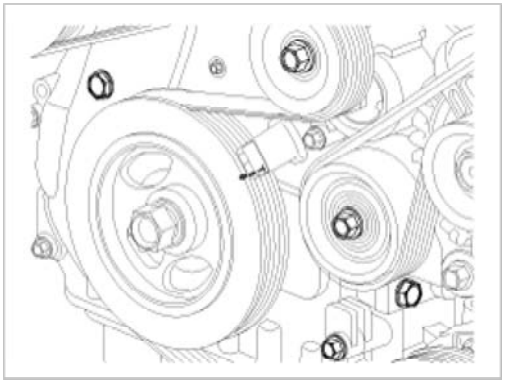

   B. Check that the mark(A) of the CVVT sprockets are in straight line on the cylinder head surface as shown in the illustration.
   If not, turn the crankshaft one revolution (360°)

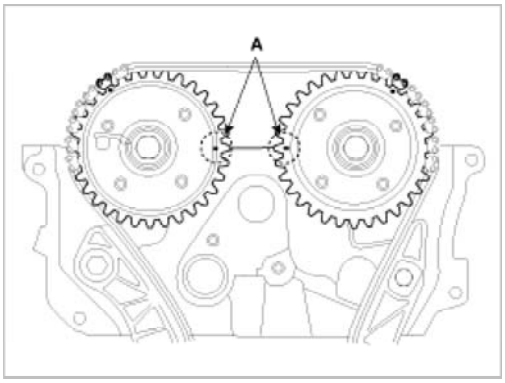

3. Inspect the valve clearance.
   A. Check only the valve indicated as shown. [No. 1 cylinder : TDC/Compression] measure the valve clearance.

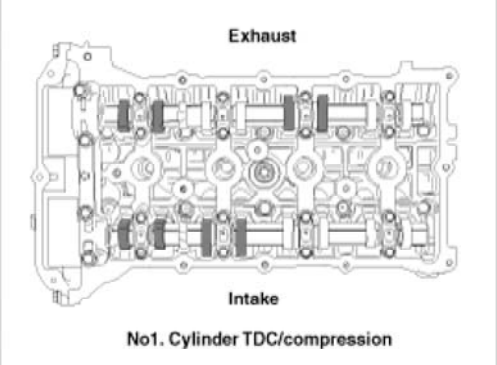

   ·Using a thickness gauge, measure the clearance between the tappet and the base circle of camshaft.
   ·Record the out-of-specification valve clearance measurements. They will be used later to determine the required replacement adjusting tappet.

Valve clearance
Specification
Engine coolant temperature : 20°C [68°F]
Limit
Intake : 0.10 ~ 0.30mm (0.0039 ~ 0.0118in.)
Exhaust : 0.20 ~ 0.40mm (0.0079 ~ 0.0157in.)

   B. Turn the crankshaft pulley one revolution (360°) and align the groove with timing mark "T" of the lower timing chain

mcx30.com

C. Check only valves indicated as shown. [NO. 4 cylinder : TDC/compression]. Measure the valve clearance.

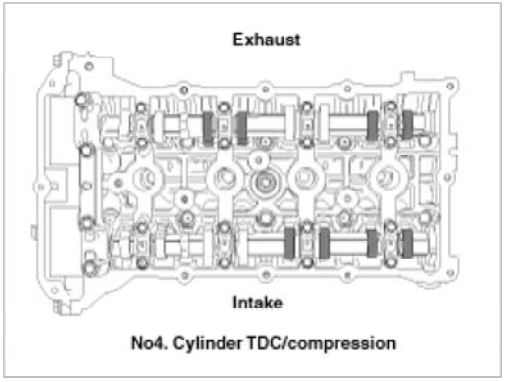

4. Adjust the intake and exhaust valve clearance.
   A. Set the No.1 cylinder to the TDC/compression.
   B. Marks on the timing chain and camshaft timing sprockets.
   C. Remove the service hole bolt(A) of the timing chain cover.

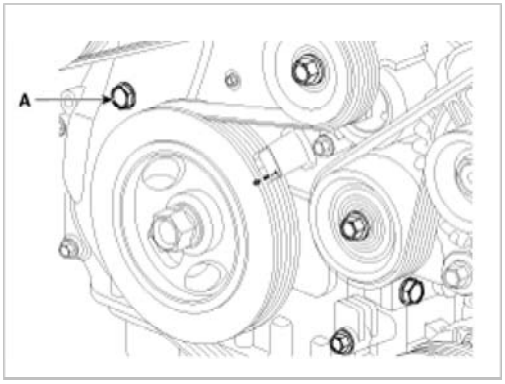

CAUTION

The bolt must not be reused once it has been assembled.

   D. Insert the SST(A) (09240-2G000) in the service hole of the timing chain cover and release the ratchet.

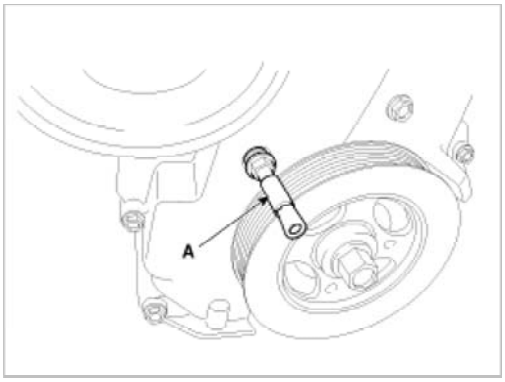

   E. Remove the front camshaft bearing cap(A).

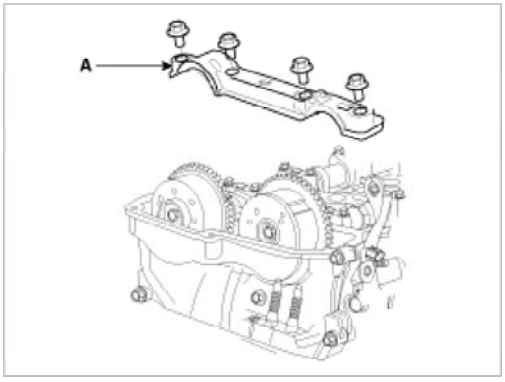

mcx30.com

G. Remove the intake camshaft bearing cap and intake camshaft.

> **CAUTION**
>
> When disconnecting the timing chain from the camshaft timing sprocket, tie or hold the timing chain so it does not fall into the timing cover.

H. Tie down timing chain so that it dosen't move.

> **CAUTION**
>
> Be careful not to drop anything inside timing chain cover.

I. Measure the thickness of the removed tappet using a micrometer.

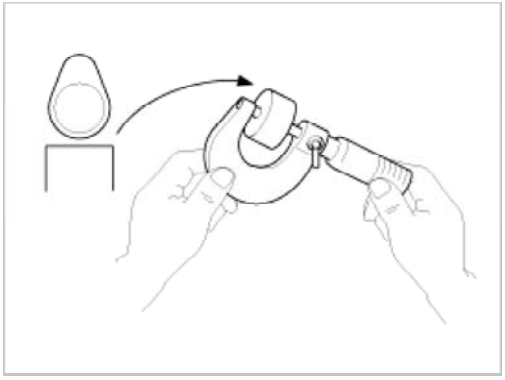

J. Calculate the thickness of a new tappet so that the valve clearance comes within the specified value.

Valve clearance (Engine coolant temperature : 20°C [68°F])
T : Thickness of removed tappet
A : Measured valve clearance
N : Thickness of new tappet
Intake : N = T + [A - 0.20mm(0.0079in.)]
Exhaust : N = T + [A-0.30mm (0.0118in.)]

K. Select a new tappet with a thickness as close as possible to the calculated value.

> **NOTE**
>
> Shims are available in 47size increments of 0.015mm (0.0006in.) from 3.00mm (0.118in.) to 3.690mm (0.1452in.)

L. Place a new tappet on the cylinder head.
M. Hold the timing chain, and install the intake camshaft and CVVT assembly.
N. Align the matchmarks on the timing chain and CVVT sprocket.
O. Install the exhaust camshaft and CVVT assembly.
P. Install the front bearing cap.

Tightening torque :
14.7N.m (1.5kgf.m, 10.8lb-ft) + 27.4 ~ 31.4N.m (2.8 ~ 3.2kgf.m, 20.3 ~ 23.1lb-ft)

Q. Install the sevice hole bolt.

Tightening torque :
11.8 ~ 14.7N.m (1.2 ~ 1.5kgf.m, 8.7 ~ 10.8lb-ft)

R. Turn the crankshaft two turns in the operating direction(clockwise) and realign crankshaft sprocket and CVVT sprocket timing marks (A).

mcx30.com

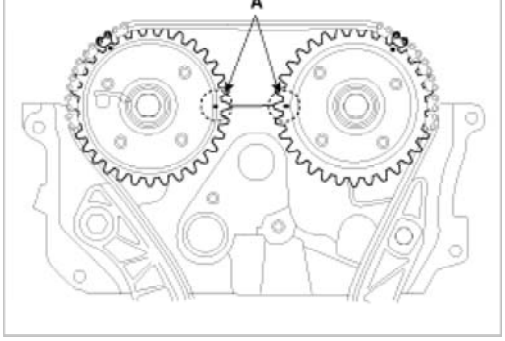

S. Recheck the valve clearance.

Valve clearance (Engine coolant temperature : 20°C [68°F])
[Specification]
Intake : 0.17 ~ 0.23mm (0.0067 ~ 0.0090in.)
Exhaust : 0.27 ~ 0.33mm (0.0106 ~ 0.0129in.)

Engine Mechanical System > General Information > Troubleshooting

Troubleshooting

Symption	Suspect area	Remedy
Engine misfire with abnormal internal lower engine noises.	Worn crankshaft bearings Loose or improperly engine filwheel	Replace the crankshaft and bearings as required. Repair or replace the flywheel as required.
	Worn piston rings (Oil consumption may or may not cause the engine to misfire.)	Inspect the cylinder for a loss of compression. Repair or replace as required.
	Worn crankshaft thrust bearings	Replace the crankshaft and bearings as required
Engine misfire with abnormal valve train noise.	Stuck valves. (Carbon buidup on the valve stem)	Repair or replace as required
	Excessive worn or mis-aligned timing chain	Replace the timing chain and sprocket as required.
	Worn camshaft lobes.	Replace the camshaft and valve lifters.
Engine misfire with coolant consumption	• Faulty cylinder head gasket or other damage to the cylinder head and engine block cooling system. • Coolant consumption may or may not cause the engine to overheat.	• Inspect the cylinder head and engine block for damage to the coolant passages and/or a faulty head gasket. • Repair or replace as required.
Engine misfire with excessive oil consumption	Worn valves, guides and/or valve stem oil seals.	Repair or replace as required.
	Worn piston rings. (Oil consumption may or may not cause the engine to misfire)	• Inspect the cylinder for a loss of compression. • Repair or replace as required.
Engine noise on start-up, but only lasting a few seconds.	Incorrect oil viscosity	• Drain the oil. • Install the correct viscosity oil.
	Worn crankshaft thrust bearing.	• Inspect the thrust bearing and crankshaft. • Repair or replace as required.
Upper engine noise, regardless of engine speed.	Low oil pressure	Repair or replace as required.
	Broken valve spring.	Replace the valve spring.
	Worn or dirty valve lifters.	Replace the valve lifters.
	Stetched or broken timing chain and/or	Replace the timing chain and sprockets.

mcx30.com

	Worn timing chain tensioner, if applicable.	Replace the timing chain tensioner as required.
	Worn camshaft lobes.	• Inspect the camshaft lobes. • Replace the timing camshaft and valve lifters as required.
	Worn valve guides or valve stems.	Inspect the valves and valve guides, then repair or replace as required.
	Stuck valves. (Carbon on the valve stem or valve seat may cause the valve to stay open.	Inspect the valves and valve guides, then repair or replace as required.
	Worn drive belt, idler, tensioner and bearing.	Replace as required
Lower engine noise, regardless of engine speed	Low oil pressure	Repair or required.
	Loose or damaged flywheel.	Repair or replace the flywheel.
	Damaged oil pan, contacting the oil pump screen.	• Inspect the oil pan. • Inspect the oil pump screen. • Repair or replace as required.
	Oil pump screen loose, damaged or restricted.	• Inspect the oil pump screen. • Repair or replace as required.
	Excessive piston-to-cylinder bore clearance.	• Inspect the piston, piston pin and cylinder bore. • Repair or replace as required.
	Excessive piston pin-to-piston clearance	• Inspect the piston, piston pin and the connecting rod. • Repair or replace as required.
	Excessive connecting rod bearing clearance	Inspect the following components and repair or replace as required. • The connecting rod bearings. • The connecting rods. • The crankshaft pin journals.
	Excessive crankshaft bearing clearance	Inspect the following components, and repair or replace as required. • The crankshaft bearings. • The crankshaft main journals. • The cylinder block
	Incorrect piston, piston pin and connecting rod installation	• Verify the piston pins and connecting rods are installed correctly. • Repair as required.
Engine noise under load	Low oil pressure	Repair or replace as required.
	Excessive connecting rod bearing clearance	Inspect the following components and repair or replace as required : • The connecting rod bearings. • The connecting rods. • The crankshaft
	Excessive crankshaft bearing clearance	Inspect the following components, and repair or replace as required. • The crankshaft bearings. • The crankshaft main journals. • The cylinder block.
Engine will not crank-crankshaft will not rotate		1. Remove spark plugs and check for fluid.

mcx30.com

	Hydraulically locked cylinder • Coolant/antifreeze in cylinder. • Oil in cylinder. • Fuel in cylinder	3. Inspect for cracked engine block or cylinder head. 4. Inspect for a sticking fuel injector and/or leaking fuel regulator.
	Broken timing chain and/or timing chain and/or timing chain gears.	1. Inspect timing chain and gears. 2. Repair as required.
	Material in cylinder • Broken valve • Piston material • Foreign material	1. Inspect cylinder for damaged components and/or foreign materials. 2. Repair or replace as required.
	Seized crankshaft or connecting rod bearings.	1. Inspect crankshaft and connecting rod bearing. 2. Repair as required.
	Bent or broken connecting rod.	1. Inspect connecing rods. 2. Repair as required.
	Broken crankshaft	1. Inspect crankshaft. 2. Repair as required.

Engine Mechanical System > General Information > Special Service Tools

Special Service Tools

Tool (Number and name)	Illustration	Use
Crankshaft front oil seal installer (09214-3K000) (09231-H1100)	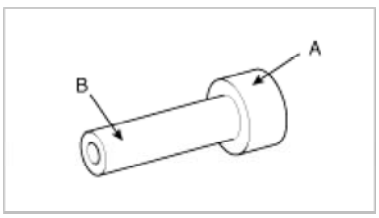	Installation of the front oil seal A : 09214-3K000 B : 09231-H1100
Ring gear stopper (09231-2B100)	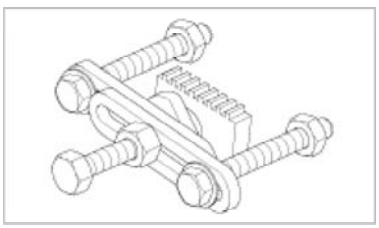	Removal and installation of crankshaft pulley bolt.
Ring gear stopper (09231-3D100)	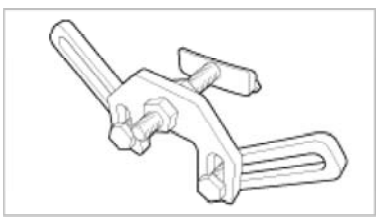	Removal and installation of crankshaft pulley bolt.
Torque angle adapter (09221-4A000)		Installtion of bolts & nuts needing an angular method of adjustment.
Valve stem oil seal installer (09222-4A000)		Installation of the valve stem oil seal

mcx30.com

	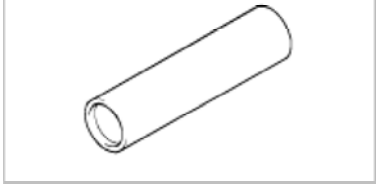	
Valve spring compressor & holder (09222-3K000) (09222-3K100)	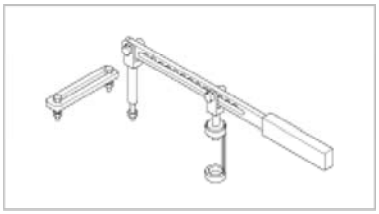	Removal and installation of the intake or exhaust valve 09222-3K100 (holder)
Crankshaft rear oil seal installer (09214-3K100) (09231-H1100)	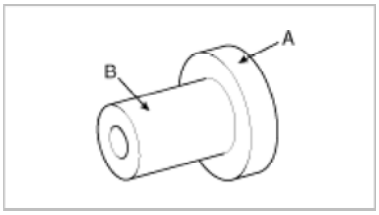	Installation of the crankshaft rear oil seal A : 09214-3K100 B : 09231-H1100
Timing chain tensioner ratchet holder (09240-2G000)	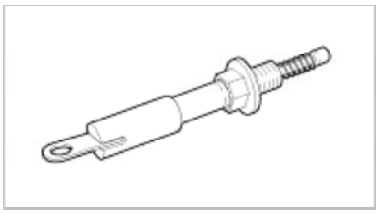	Timing chain tension release In vehicle inspection and adjustment of valve clearance.
Oil pan remover (09215-3C000)	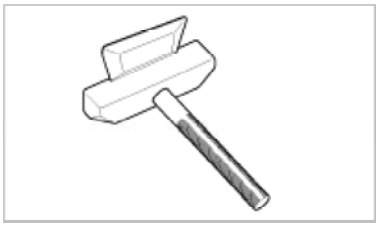	Removal of oil pan

Engine Mechanical System > Engine And Transaxle Assembly > Engine Mounting > Components and Components Location

Components

mcx30.com

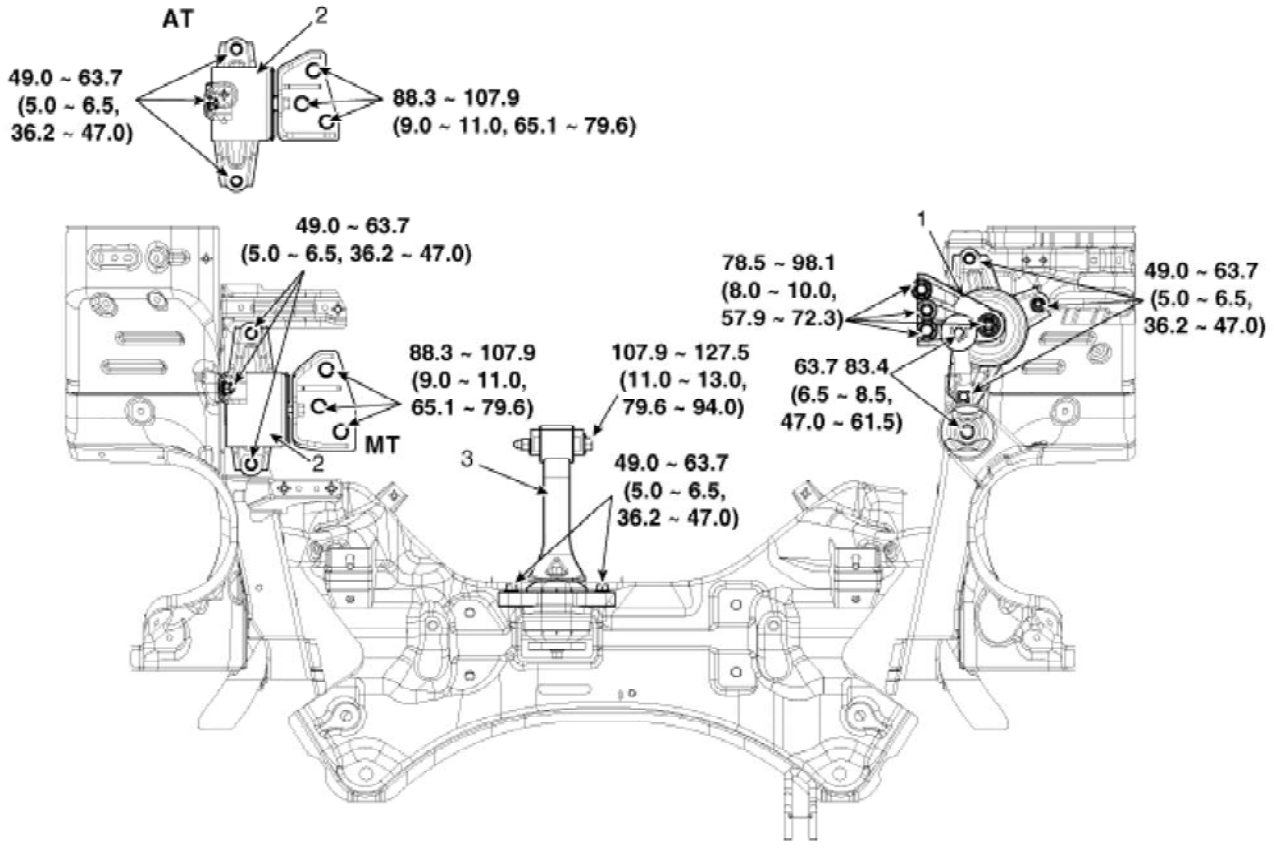

Torque : N.m (kgf.m, lb-ft)

1. Engine mounting bracket 2. Transaxle mounting bracket	3. Roll rod bracket

Engine Mechanical System > Engine And Transaxle Assembly > Engine And Transaxle Assembly > Repair procedures

Removal

CAUTION

- Use fender covers to avoid damaging painted surfaces.
- To avoid damage, unplug the wiring connectors carefully while holding the connector portion.

NOTE

- Mark all wiring and hoses to avoid misconnection.
- For release the fuel system pressure before remove the engine assembly, start the engine without fuel pump relay. And then turn off the ignition switch after engine stops.

1. Disconnect the battery negative terminal (A).

Tightening torque:
(-) terminal : 4.0 ~ 6.0N.m (0.4 ~ 0.6kgf.m, 3.0 ~ 4.4lb-ft)

mcx30.com

3. Remove the air duct (C).

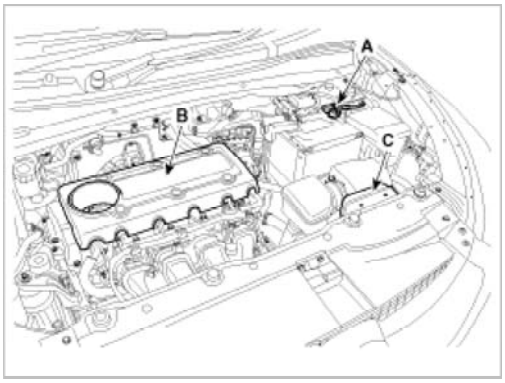

4. Disconnect the breather hose (A), air intake hose (B) and then remove the air cleaner assembly (C).

Tightening torque
Hose clamp bolt:
2.9 ~ 4.9 N.m (0.3 ~ 0.5 kgf.m, 2.2 ~ 3.6 lb-ft)
Air cleaner assembly bolts:
7.8 ~ 11.8 N.m (0.8 ~ 1.2 kgf.m, 5.8 ~ 8.7 lb-ft)

5. Disconnect the battery positive terminal and then remove the battery (D).

Tightening torque:
(+) terminal : 7.8 ~ 11.8 N.m (0.8 ~ 1.2 kgf.m, 5.8 ~ 8.7 lb-ft)
Bracket bolt : 9.8 ~ 11.8 N.m (1.0 ~ 1.2 kgf.m, 7.2 ~ 8.7 lb-ft)

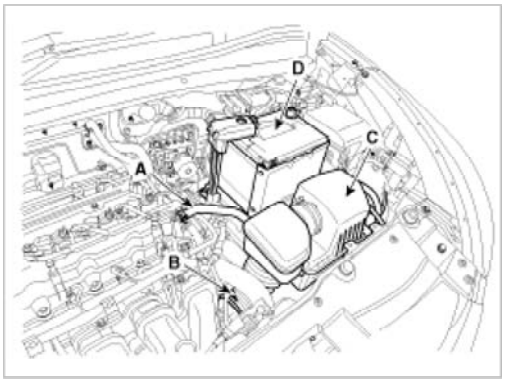

6. Disconnect the ECM connector and then remove the ECM (A) and the battery tray (B).

Tightening torque:
9.8 ~ 11.8 N.m (1.0 ~ 1.2 kgf.m, 7.2 ~ 8.7 lb-ft)

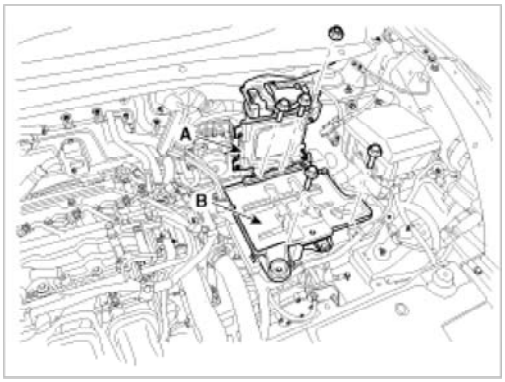

7. Remove the under cover (A).

Tightening torque:

mcx30.com

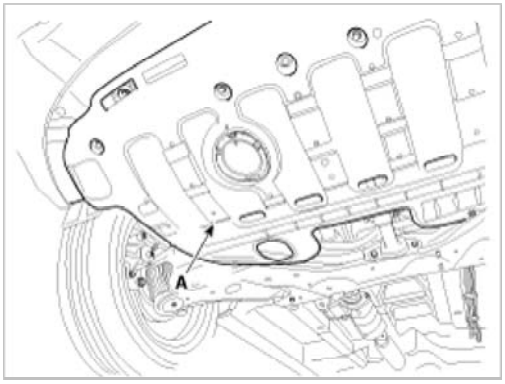

8. Loosen the drain plug (A), and drain the coolant.
   Remove the radiator cap to speed draining.

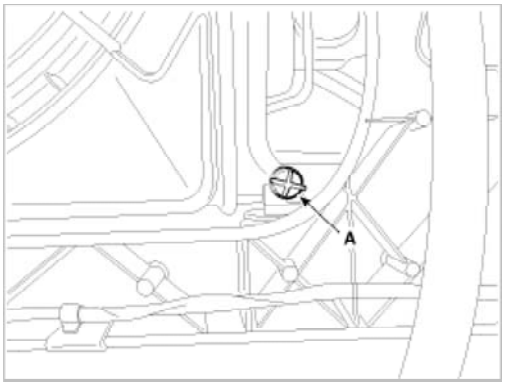

> **WARNING**
>
> Never remove the radiator cap when the engine is hot. Serious scalding could be caused by hot fluid under high pressure escaping from the radiator.

9. Remove the radiator upper hose (A) and lower hose (B).

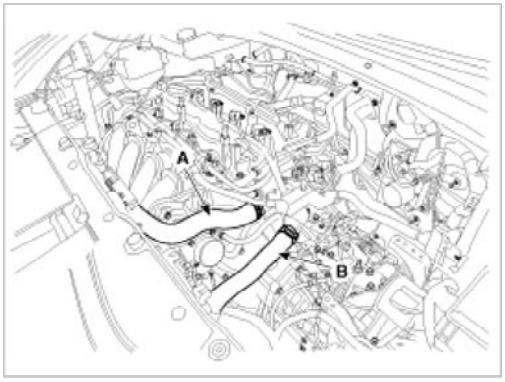

10. Recover the refrigerant and then remove the high pressure pipe and low pressure pipe. (Refer to Air conditioning system in HA Group.)

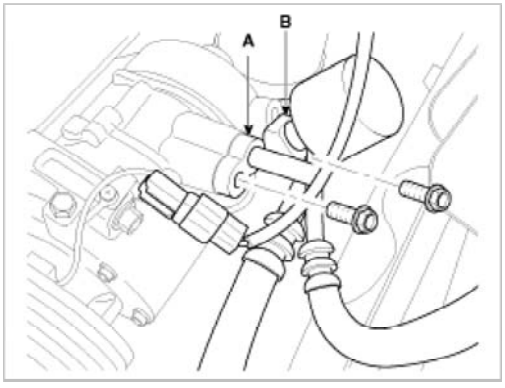

mcx30.com

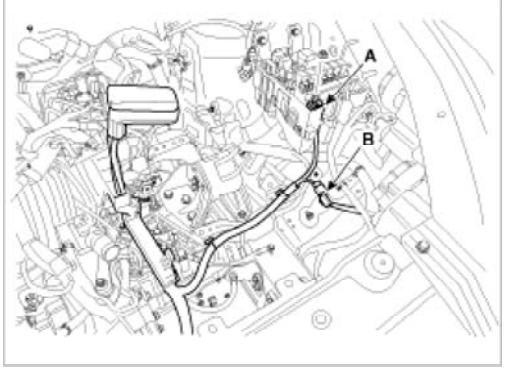

12. Disconnect the wiring connectors, harness clamps from the engine.
    (1) OCV connector (A)

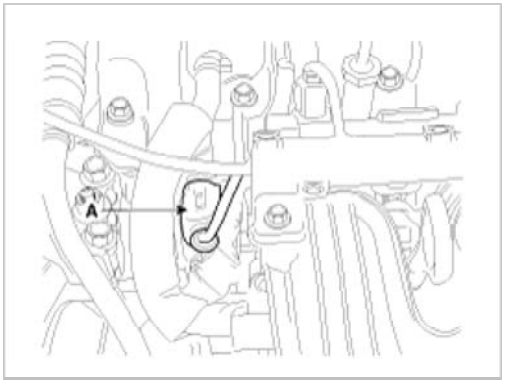

    (2) VIS connector (A)
    (3) Oil pressure switch (B)
    (4) Knock sensor connector (C)
    (5) A/C compressor switch connector (D)
    (6) Alternator connector (E)

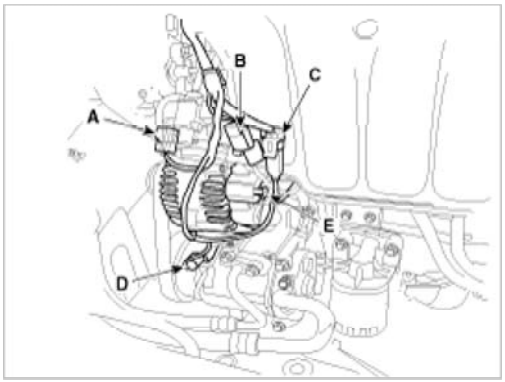

    (7) Injector connectors (A)
    (8) Ignition coil connectors (B)
    (9) Intake CMPS connector (C)
    (10) Exhaust CMPS connector (D)
    (11) Exhaust OCV connector (E)

mcx30.com

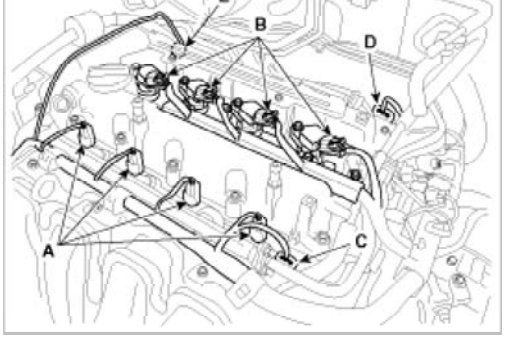

(12) VCM connector (A)

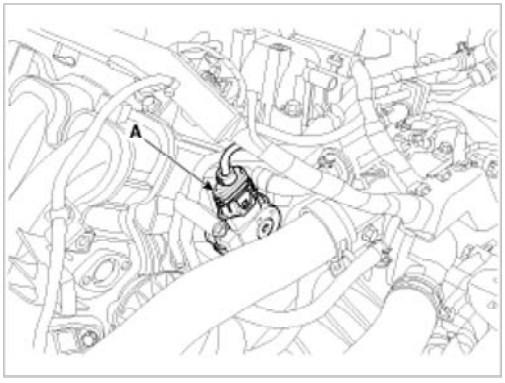

(13) ETC connector (A)

(14) MAP & IATS connector (B)

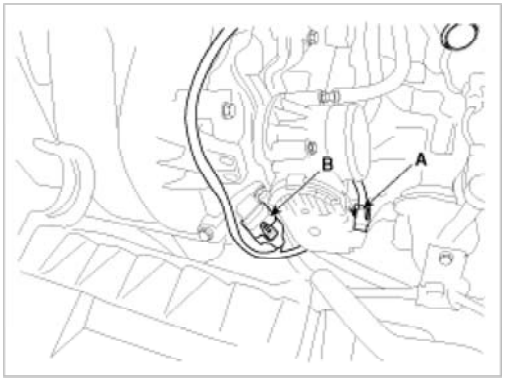

(15) PCSV connector (A)

(16) ECT sensor connector (B)

(17) Condenser connector (C)

(18) CKP sensor connector (D)

(19) Oxygen sensor connector (E)

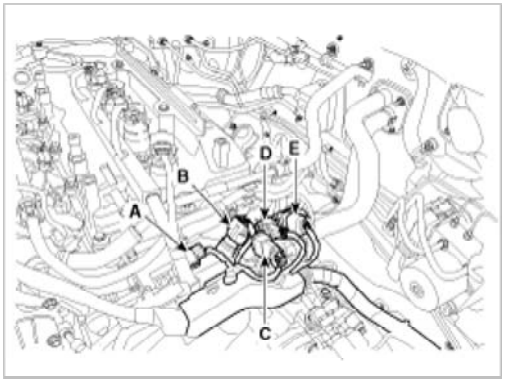

13. Remove the transaxle wire harness connectors and control cable from the transaxle. (Refer to MT or AT group)

mcx30.com

15. Remove the shock absorbers, the stabilizer bar links and the tie rod ends. (Refer to SS, ST group)
16. Disconnect the drive shafts from the axle hub. (Refer to DS group)
17. Remove the steering u-joint mounting bolt (A). (Refer to ST group)

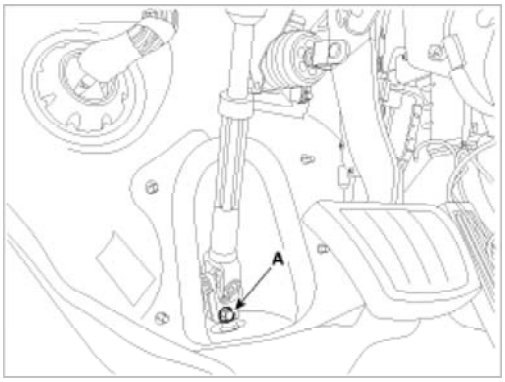

18. Disconnect the fuel hose (A), brake booster vacuum hose (B) and heater hoses (C).

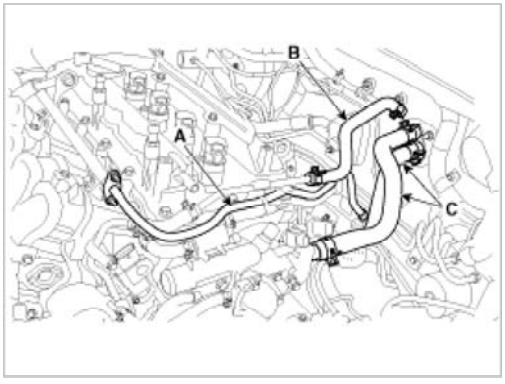

19. Remove the front muffler (A).

Tightening torque:
39.2 ~ 58.8 N.m (4.0 ~ 6.0 kgf.m, 28.9 ~ 43.4 lb-ft)

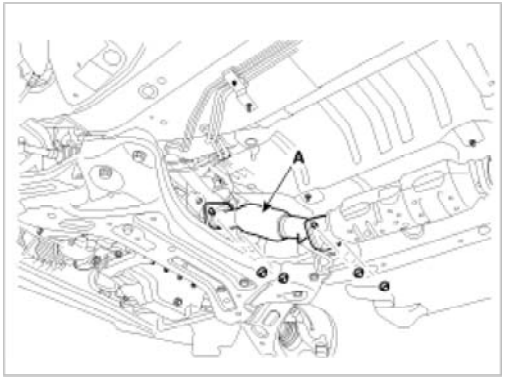

20. Remove the roll rod bracket (A).

Tightening torque:
107.9 ~ 127.5 N.m (11.0 ~ 13.0 kgf.m, 79.6 ~ 94.0 lb-ft)

mcx30.com

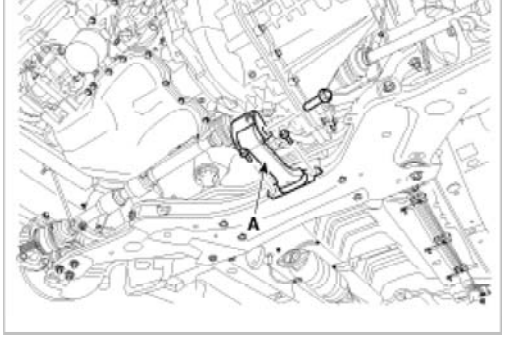

21. Remove the sub frame. (Refer to SS group)
22. Support the engine and transaxle with a jack.
23. Disconnect the ground cable, and then remove the engine mounting bracket (A).

Tightening torque:
78.5 ~ 98.1 N.m (8.0 ~ 10.0 kgf.m, 57.9 ~ 72.3 lb-ft)

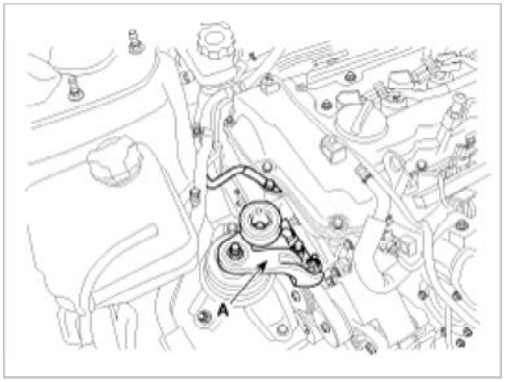

24. Disconnect the ground cable, and then remove the transaxle mounting bracket bolt (A).

Tightening torque:
88.3 ~ 107.9 N.m (9.0 ~ 11.0 kgf.m, 65.1 ~ 79.6 lb-ft)

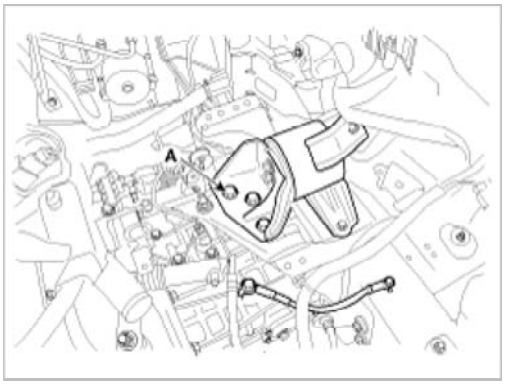

25. Remove the engine and transaxle assembly by lifting vehicle.

mcx30.com

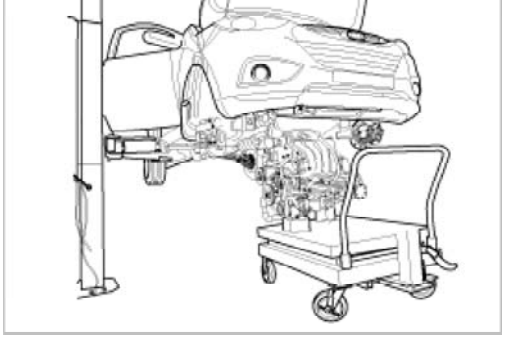

CAUTION

When remove the engine and transaxle assembly, be careful not to damage any surrounding parts or body components.

Installation

Installation is in the reverse order of removal.
Perform the following :

- Adjust a shift cable.
- Adjust a throttle cable.
- Refill engine with engine oil.
- Refill a transaxle with fluid.
- Refill power steering fluid.
- Refill a radiator and a reservoir tank with engine coolant.
- Place a heater control knob on "HOT" positon.
- Clean battery posts and cable terminals and assemble.
- Inspect for fuel leakage.
  - After assemble the fuel line, turn on the ignition switch (do not operate the starter) so that the fuel pump runs for approximately two seconds and fuel line pressurizes.
  - Repeat this operation two or three times, then check for fuel leakage at any point in the fuel line.
- Bleed air from the cooling system.
  - Start engine and let it run until it warms up. (until the radiator fan operates 3 or 4 times.)
  - Turn Off the engine and let it cool down. Check the level in the radiator, add coolant if needed. This will allow trapped air to be removed from the cooling system.
  - Put radiator cap on tightly, then run the engine again and check for leaks.

Engine Mechanical System > Timing System > Timing Chain > Components and Components Location

Components

[2.0L Engine only (Oil pump type)]

mcx30.com

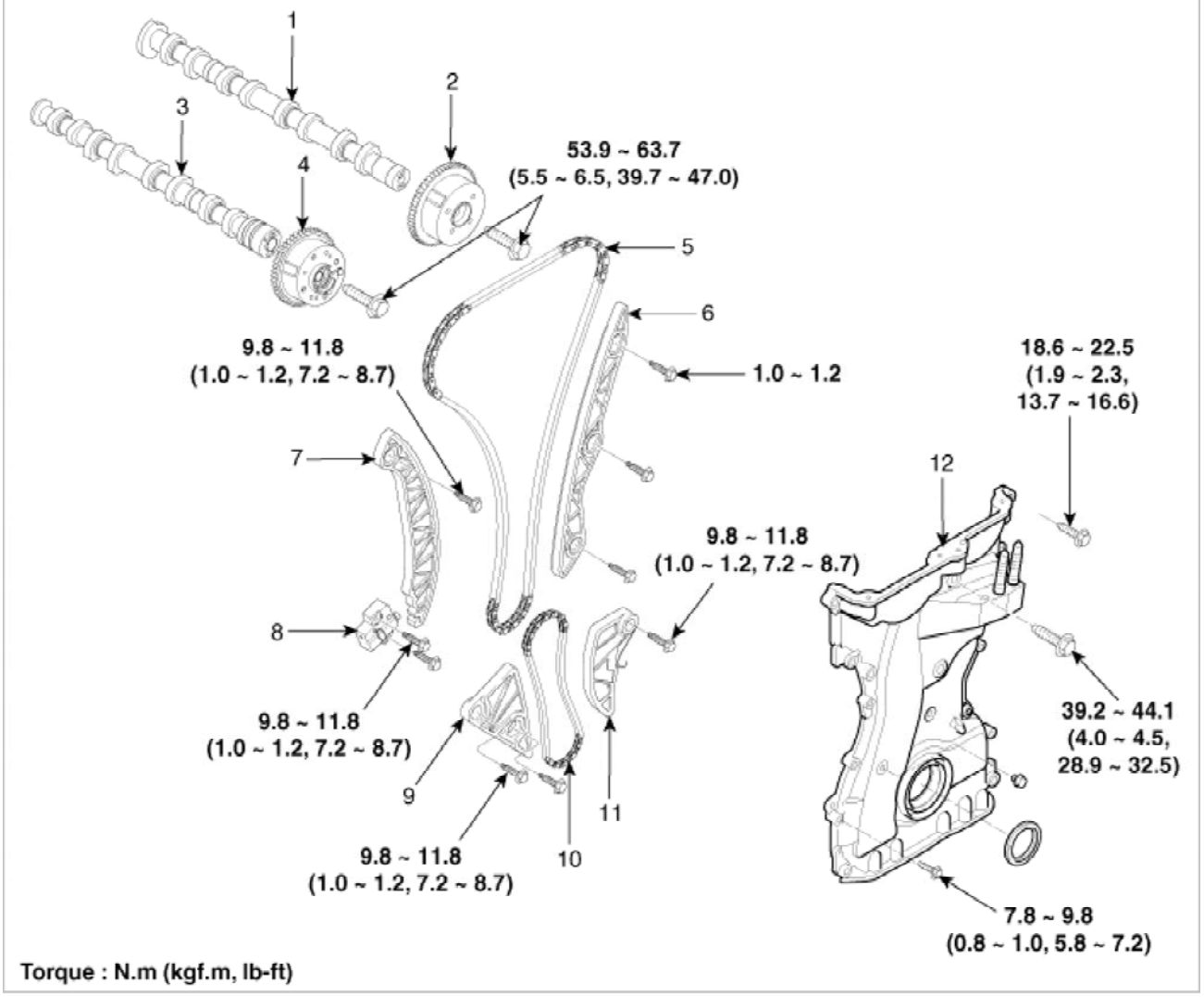

1. Intake camshaft	5. Timing chain	9. Oil pump chain guide
2. Intake CVVT assembly	6. Timing chain guide	10. Oil pump chain
3. Exhaust camshaft	7. Timing chain tensioner arm	11. Oil pump chain mechanical tensioner arm
4. Exhaust CVVT assembly	8. Timing chain tensioner	12. Timing chain cover

[2.4L Engine only (Balance shaft module type)]

mcx30.com

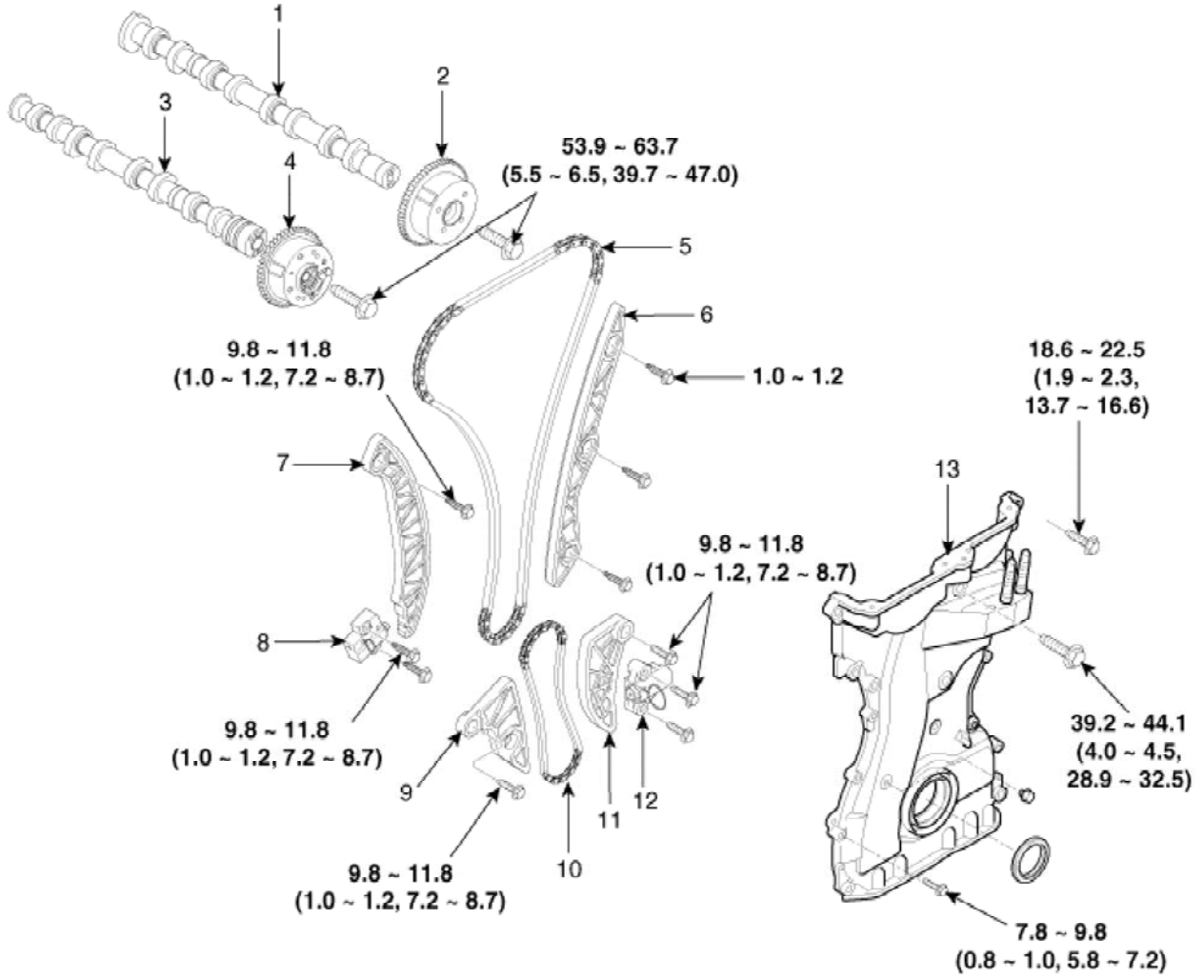

1. Intake camshaft 2. Intake CVVT assembly 3. Exhaust camshaft 4. Exhaust CVVT assembly	5. Timing chain 6. Timing chain guide 7. Timing chain tensioner arm 8. Timing chain tensioner	9. Balance shaft chain guide 10. Balance shaft chain 11. Balance shaft chain tensioner arm 12. Balance shaft chain tensioner 13. Timing chain cover

Engine Mechanical System > Timing System > Timing Chain > Repair procedures

Removal

1. Disconnect the battery nagative cable.
2. Remove the engine cover (A).

mcx30.com

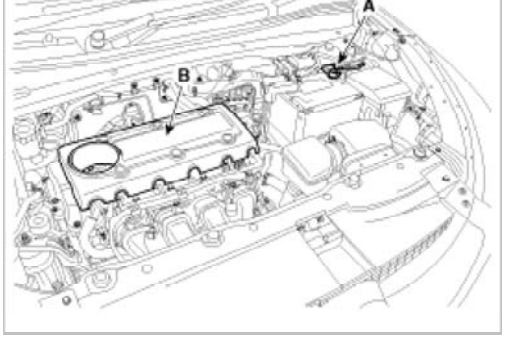

3. Remove the RH front wheel.
4. Remove the RH side cover.
5. Set No.1 cylinder to TDC/compression.

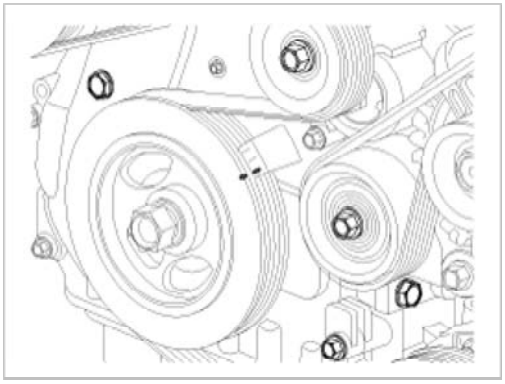

6. Drain the engine oil, and then set a jack to the oil pan.

> **NOTE**
>
> Place wooden block between the jack and engine oil pan.

7. Disconnect the ground cable and then remove the engine mounting bracket (A).

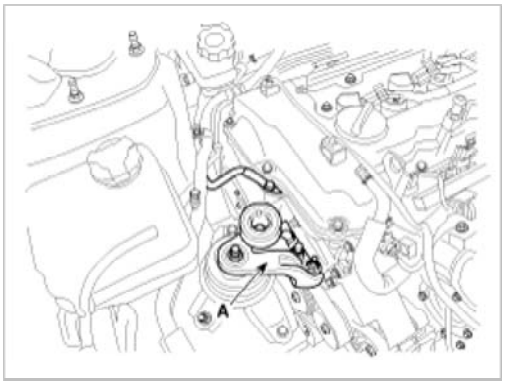

8. Remove the drive belt (A).

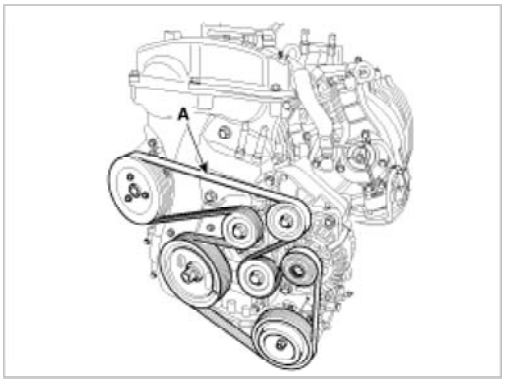

mcx30.com

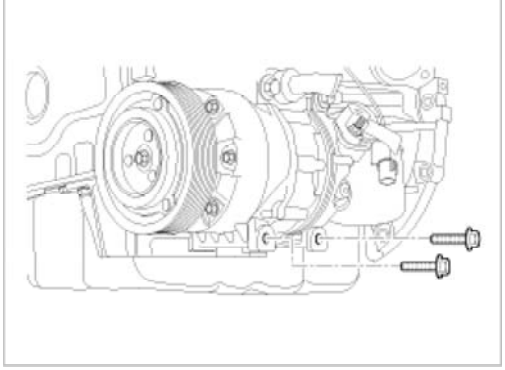

10. Remove the compressor bracket (A).

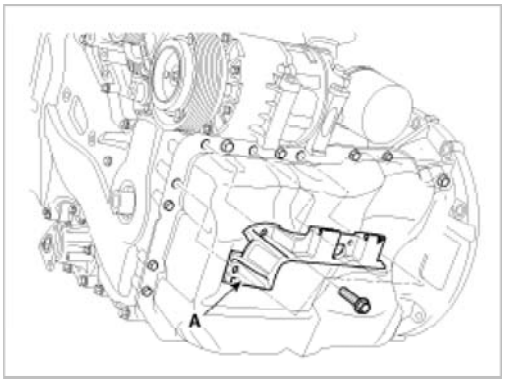

11. Remove the idler (A) and drive belt tensioner pulley (B).

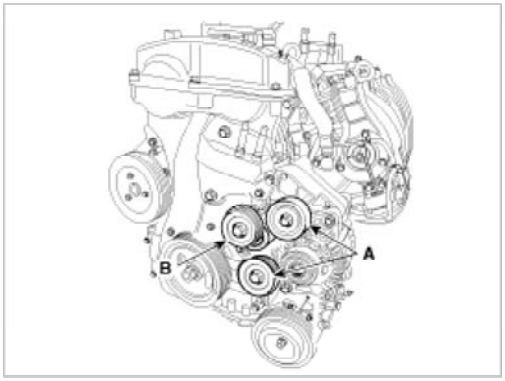

CAUTION

The tensioner pulley bolt has LEFT handed threads.

12. Remove the water pump pulley (A), crankshaft pulley (B).

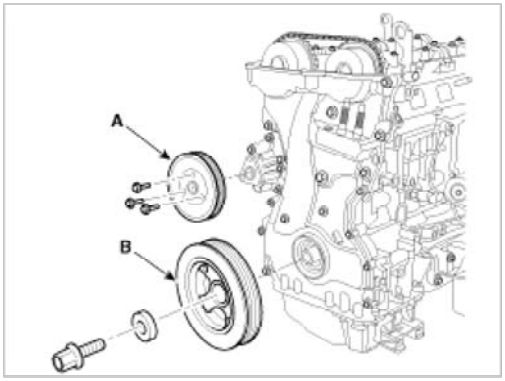

NOTE

There are two methods to hold the ring gear when installing or removing the crankshaft damper pulley.

mcx30.com

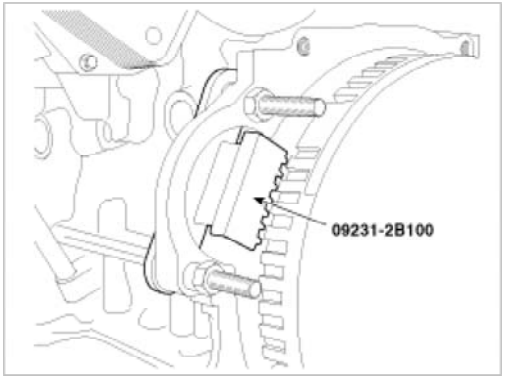

- Install the SST (09231-3D100) to hold the ring gear after removing the dust cover.

1. Remove the dust cover (A) on the bottom of the ladder frame and unfasten the two transaxle mounting bolts (B).

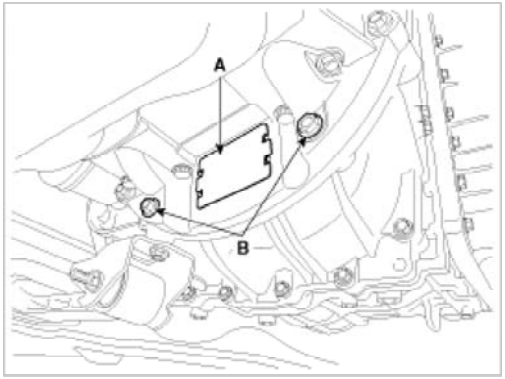

2. Adjust the length of the holder nuts (A) so that the front plate of the holder (B) puts in the ring gear (C) teeth.
3. Adjust the angle of the links (D) so that the two transaxle mounting bolts can be fastened to the original mounted holes.

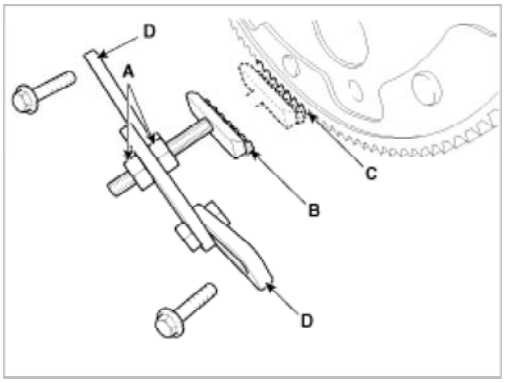

4. Install the SST (09231-3D100) using the two transaxle mounting bolts and spacers. Tighten the bolts and nuts of the holder and links securely.

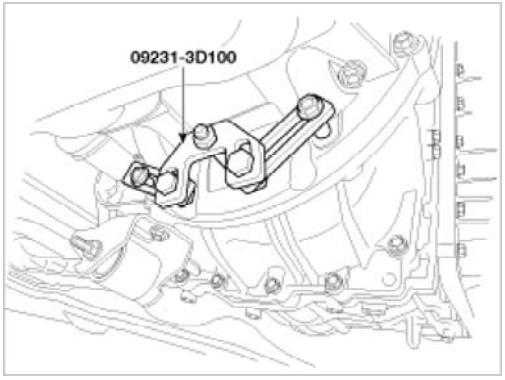

13. Remove the oil pan (A).

mcx30.com

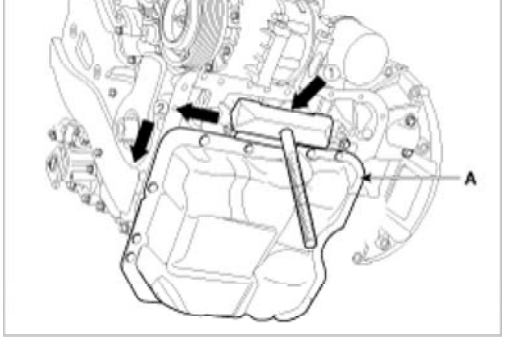

CAUTION

Use the SST (Oil pan remover, 09215-3C000) be careful not to damage the contact surfaces of cylinder block and oil pan.

14. Remove the breather hose (A).

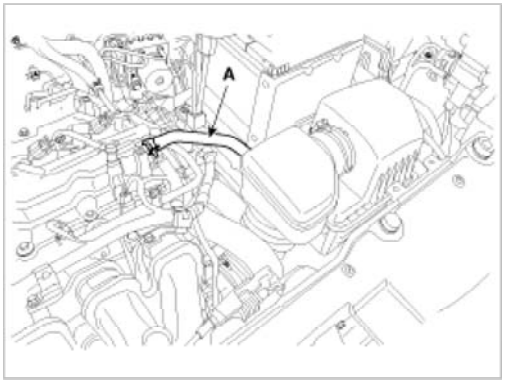

15. Disconnect the PCV hose (A) and the exhaust OCV connector (B).
16. Disconnect the ignition coil connectors (C), and then remove the ignition coils.

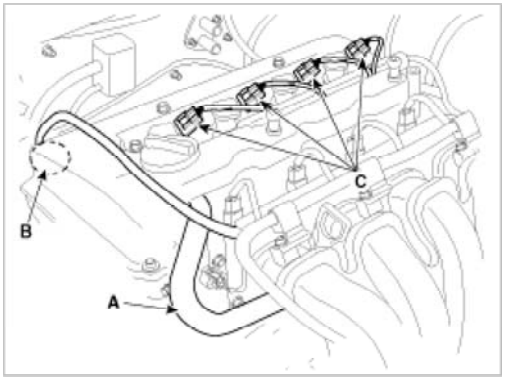

17. Remove the cylinder head cover (A).

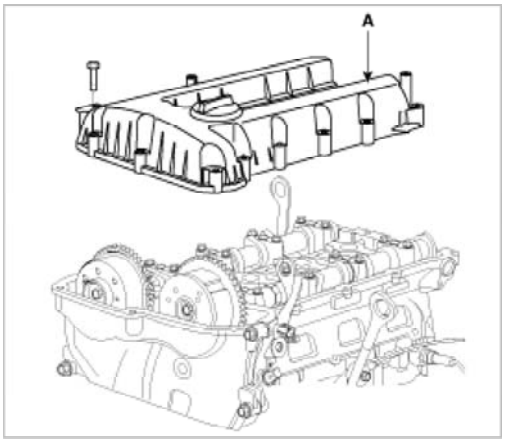

mcx30.com

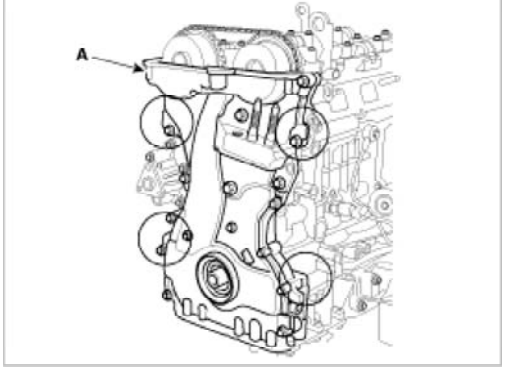

CAUTION

Be careful not to damage the contact surfaces of cylinder block, cylinder head and timing chain cover.

19. The key of crankshaft should be aligned with the mating face of main bearing cap. As a result of this, the piston of No.1 cylinder is placed at the top dead center on compression stroke.

NOTE

Before removing the timing chain, mark the timing chain with an identification based on the location of the sprocket because the identification mark on the chain for TDC (Top Dead Center) can be erased.

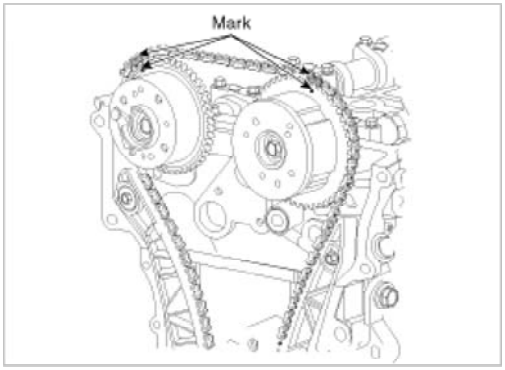

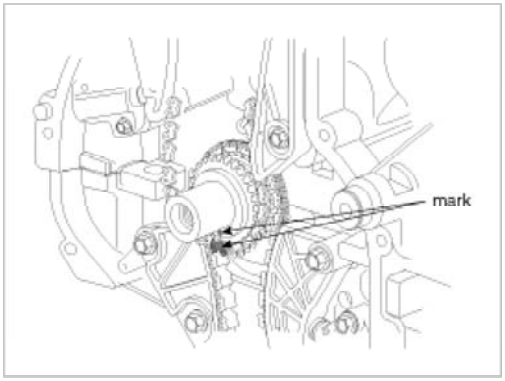

20. Install a set pin after compressing the timing chain tensioner.

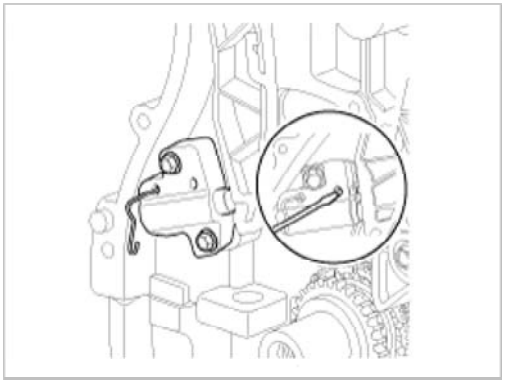

mcx30.com

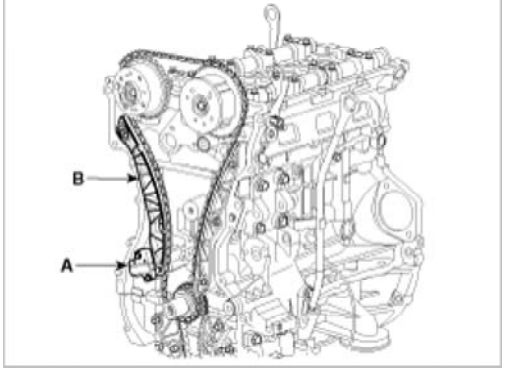

22. Remove the timing chain.
23. Remove the timing chain guide (A).

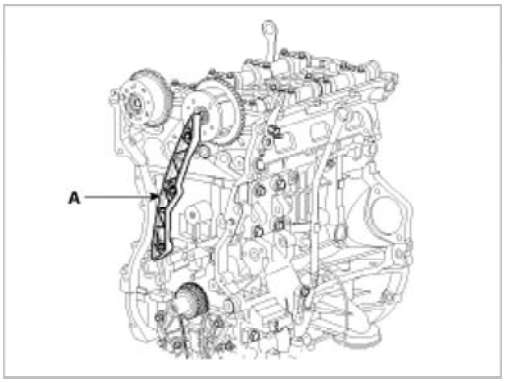

24. Remove the timing chain oil jet (A).
25. Remove the crankshaft chain sprocket (B).

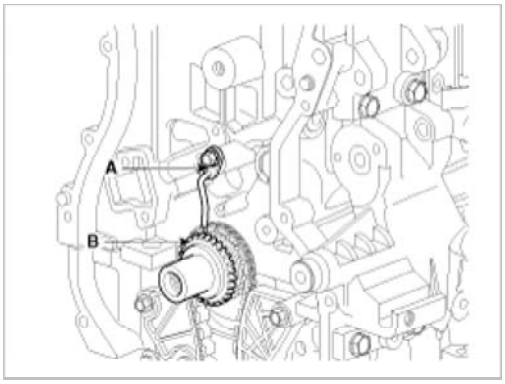

26. Remove the balance shaft chain (oil pump chain).
    (Refer to Lubrication system in this group)

Inspection

Sprockets, Hydraulic Tensioner, Chain Guide, Tensioner Arm

1. Check the CVVT sprocket, crankshaft sprocket teeth for abnormal wear, cracks or damage. Replace if necessary.
2. Check a contact surface of the chain tensioner arm and guide for abnormal wear, cracks or damage. Replace if necessary.
3. Check the hydraulic tensioner for its piston stroke and ratchet operation. Replace if necessary.

Belt, Idler, Pulley

1. Check the idler for excessive oil leakage, abnormal rotation or vibration. Replace if necessary.
2. Check belt for maintenance and abnormal wear of V-ribbed part. Replace if necessary.
3. Check the pulleys for vibration in rotation, oil or dust deposit of V-ribbed part. Replace if necessary.

mcx30.com

1. Install the balance shaft chain (Oil pump chain). (Refer to Lubrication system in this group)
2. Install the crankshaft chain sprocket (B).
3. Install the timing chain oil jet (A).

Tightening torque :
7.8 ~ 9.8N.m (0.8 ~ 1.0kgf.m, 5.8 ~ 7.2lb-ft)

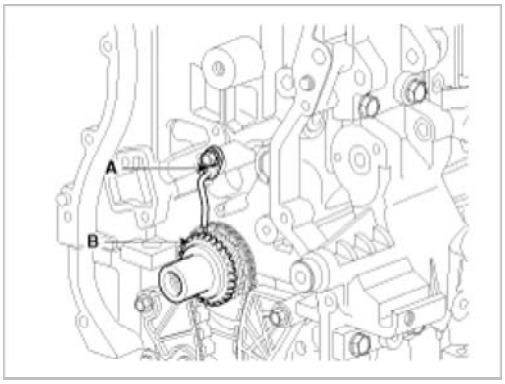

4. Set the crankshaft so that the key (A) of crankshaft will be aligned with the mating surface of main bearing cap. Put the intake and exhaust camshaft assembly so that the TDC marks (B) of the intake and exhaust CVVT sprockets will be aligned with the top surface of cylinder head. As a result of this, the piston of No.1 cylinder is placed at the top dead center on compression stroke.

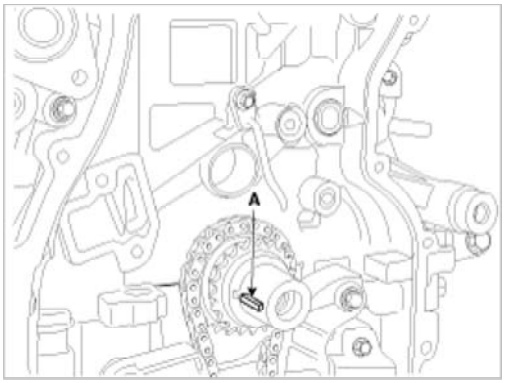

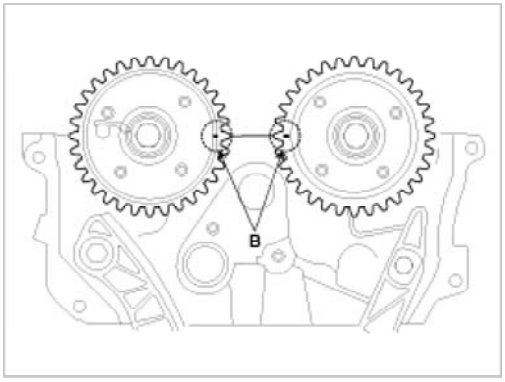

5. Install the timing chain guide (A).

Tightening torque :
9.8 ~ 11.8N.m (1.0 ~ 1.2kgf.m, 7.2 ~ 8.7lb-ft)

mcx30.com

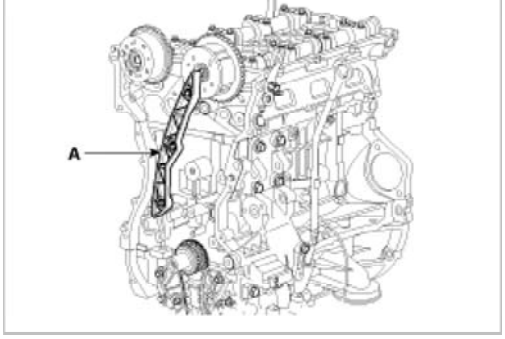

6. Install the timing chain.
   To install the timing chain with no slack between each shaft (cam, crank), follow the below procedure.Crankshaft sprocket (A) → Timing chain guide (B) → Intake CVVT assembly (C) → Exhaust CVVT assembly (D).
   The timing mark of each sprockets should be matched with timing mark (color link) of timing chain at installing timing chain.

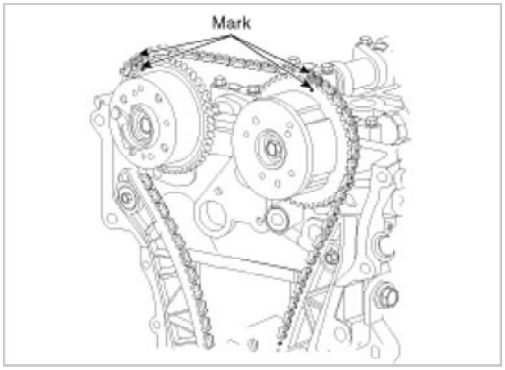

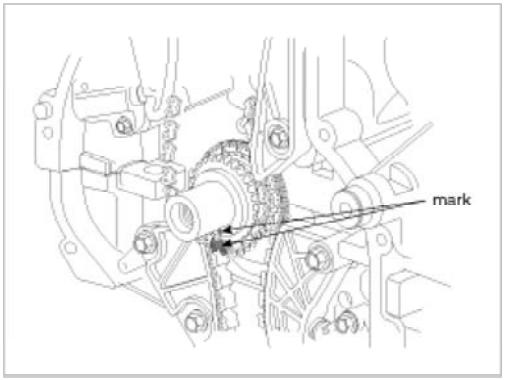

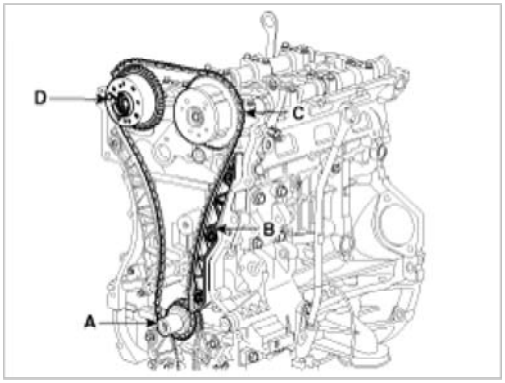

7. Install the timing chain tensioner arm (B).

Tightening torque :
9.8 ~ 11.8N.m (1.0 ~ 1.2kgf.m, 7.2 ~ 8.7lb-ft)

8. Install the timing chain auto tensioner (A) and remove the set pin.

mcx30.com

9.8 ~ 11.8N.m (1.0 ~ 1.2kgf.m, 7.2 ~ 8.7lb-ft)

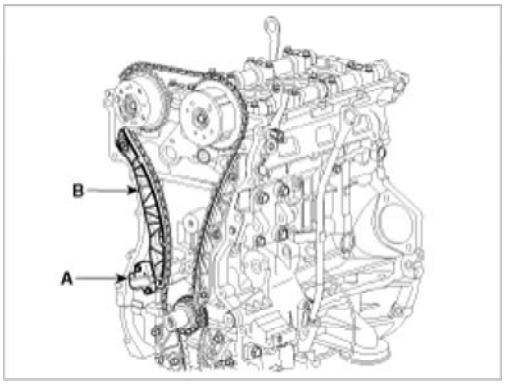

9. After rotating crankshaft 2 revolutions in regular direction (clockwise viewed from front), confirm the timing mark.

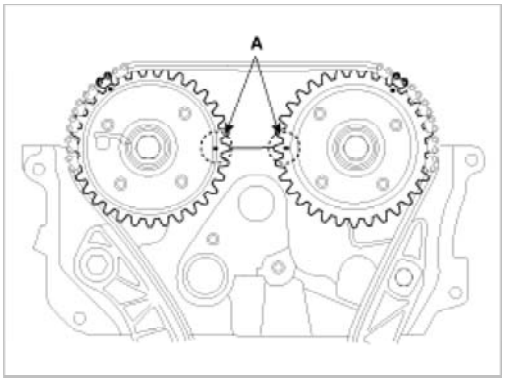

10. Install timing chain cover.
    A. Using a gasket scraper, remove all the old gasket meterial from the gasket surfaces.
    B. The sealant locations on chain cover and on counter parts (cylinder head, cylinder block, and ladder frame) must be free of engine oil and ETC.
    C. Before assembling the timing chain cover, the liquid sealant Loctite 5900H or THREEBOND 1217H should be applied on the gap between cylinder head and cylinder block.
    The part must be assembled within 5 minutes after sealant was applied.

    Bead width : 3.0mm(0.12in.)

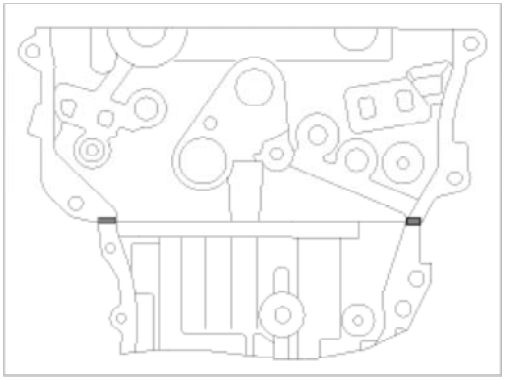

    D. After applying liquid sealant Loctite 5900H or THREE BOND 1217H on timing chain cover. The part must be assembled within 5 minutes after sealant was applied. Sealant should be applied without discontinuity.

    Bead width : 3.0mm(0.12in.)

mcx30.com

E. The dowel pins on the cylinder block and holes on the timing chain cover should be used as a reference in order to assemble the timing chain cover to be in exact position.

Tightening torque :
6x25 : 7.8 ~ 9.8N.m (0.8 ~ 1.0kgf.m, 5.8 ~ 7.2lb-ft)
8x28 : 18.6 ~ 22.5N.m (1.9 ~ 2.3kgf.m, 13.7 ~ 16.6lb-ft)
10x45 : 39.2 ~ 44.1N.m (4.0 ~ 4.5kgf.m, 28.9 ~ 32.5lb-ft)
10x40 : 39.2 ~ 44.1N.m (4.0 ~ 4.5kgf.m, 28.9 ~ 32.5lb-ft)

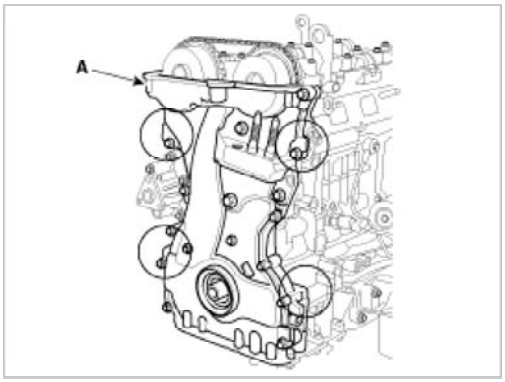

F. Running the engine or performing a pressure test should not be performed within 30 minutes of assembly.

11. Install the oil pan.
    A. Using a gasket scraper, remove all the old packing material from the gasket surfaces.
    B. Before assembling the oil pan, the liquid sealant Loctite 5900H or THREEBOND 1217H should be applied on oil pan. The part must be assembled within 5 minutes after the sealant was applied.

Bead width: 3.0mm (0.12in)

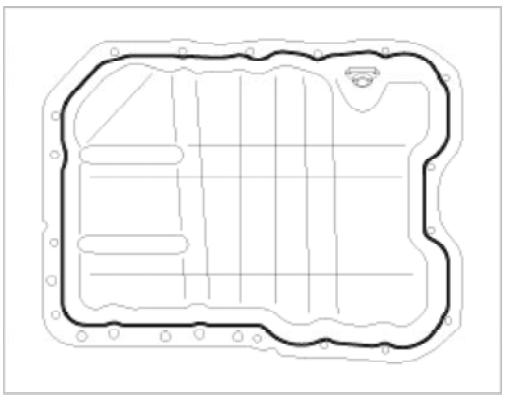

CAUTION

- When applying sealant gasket, sealant must not protrud into the inside of oil pan.
- To prevent leakage of oil, apply sealant gasket to the inner threads of the bolt holes.

C. Install the oil pan (A).

mcx30.com

Tightening torque :
M9 (B) : 30.4 ~ 34.3N.m (3.1 ~ 3.5kgf.m, 22.4 ~ 25.3lb-ft)
M6 (C) : 9.8 ~ 11.8N.m (1.0 ~ 1.2kgf.m, 7.2 ~ 8.7lb-ft)

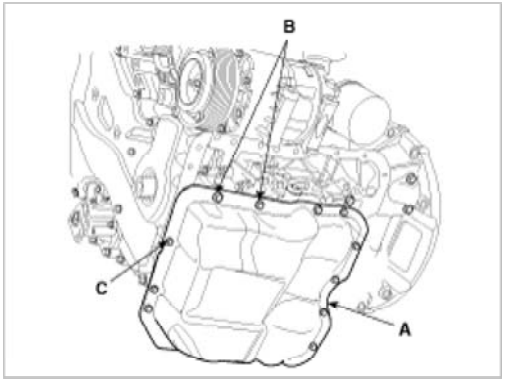

D. After assembly, wait at least 30 minutes before filling the engine with oil.

12. Install the cylinder head cover.
    A. The hardened sealant located on the upper area between timing chain cover and cylinder head should be removed before assembling cylinder head cover.
    B. After applying sealant (Loctite 5900H), it should be assembled within 5 minutes.

Bead width : 2.5mm(0.1in.)

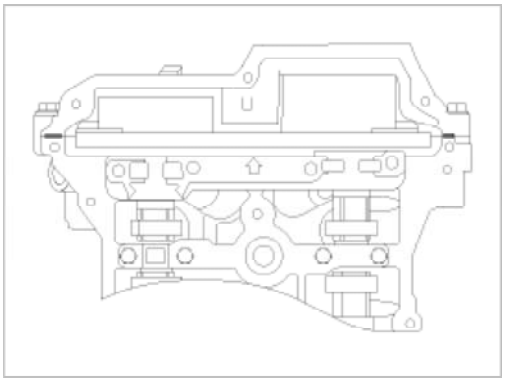

C. Running the engine or performing a pressure test should not be performed within 30 minutes of assembly.
D. Install the cylinder head cover bolts in the following sequence.

Tightening torque :
Step 1 : 3.9 ~ 5.9N.m (0.4 ~ 0.6kgf.m, 2.9 ~ 4.3lb-ft)
Step 2 : 7.8 ~ 9.8N.m (0.8 ~ 1.0kgf.m, 5.8 ~ 7.2lb-ft)

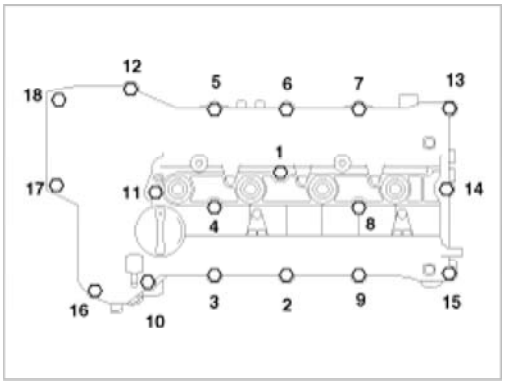

CAUTION

mcx30.com

13. Install the breather hose (A).

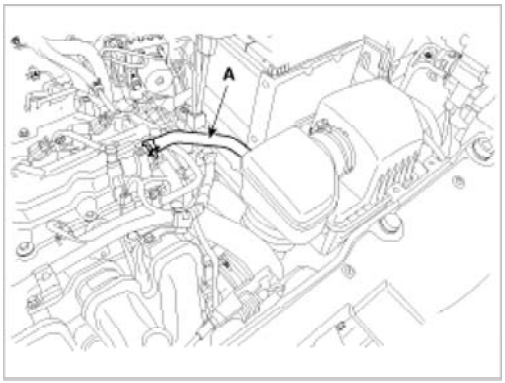

14. Connect the PCV hose (A) and exhaust OCV connector (B).
15. Install the ignition coils and then connect the ignition coil connectors (C).

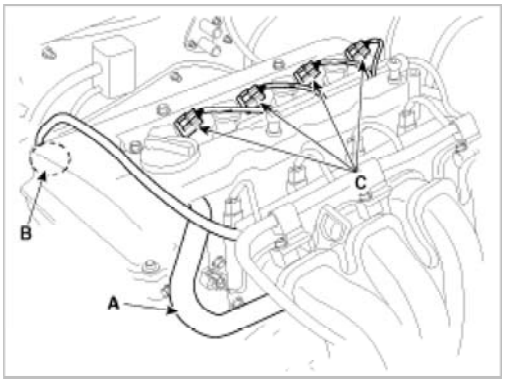

16. Install the crankshaft pulley (B).

Tightening torque :
166.6 ~ 176.4N.m (17.0 ~ 18.0kgf.m, 122.9 ~ 130.1lb-ft)

NOTE

There are two methods to hold the ring gear when installing or removing the crankshaft damper pulley.

- Install the SST (09231-2B100) to hold the ring gear after removing the starter.

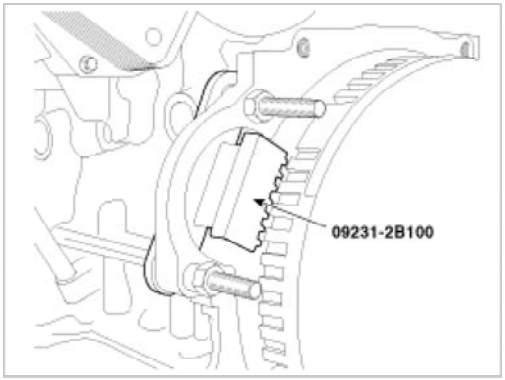

- Install the SST (09231-3D100) to hold the ring gear after removing the dust cover.

1. Remove the dust cover (A) on the bottom of the ladder frame and unfasten the two transaxle mounting bolts (B).

mcx30.com

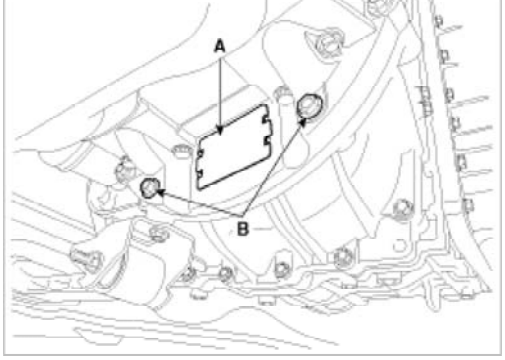

2. Adjust the length of the holder nuts (A) so that the front plate of the holder (B) puts in the ring gear (C) teeth.
3. Adjust the angle of the links (D) so that the two transaxle mounting bolts can be fastened to the original mounted holes.

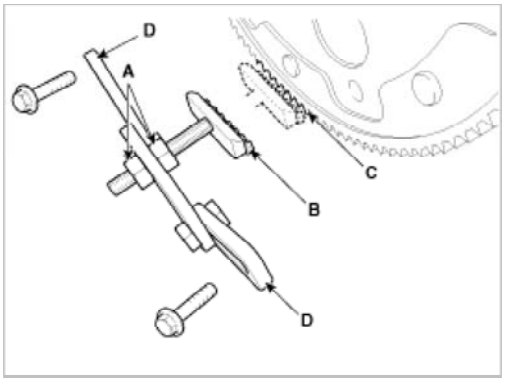

4. Install the SST (09231-3D100) using the two transaxle mounting bolts and spacers. Tighten the bolts and nuts of the holder and links securely.

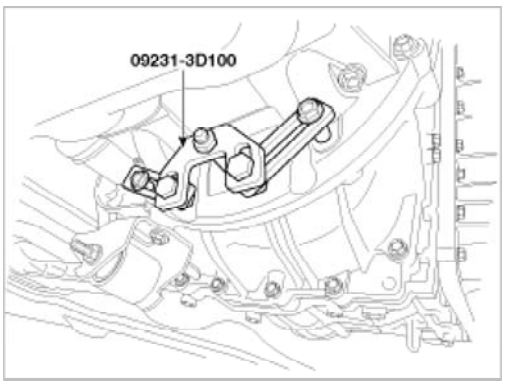

17. Install the water pump pulley (A).

Tightening torque :
7.8 ~ 9.8N.m (0.8 ~ 1.0kgf.m, 5.8 ~ 7.2lb-ft)

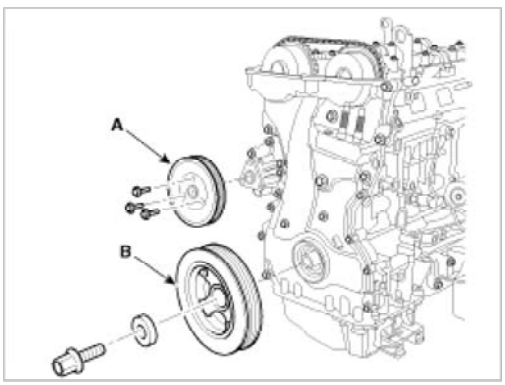

18. Install the drive belt tensioner pulley (B).

mcx30.com

Tightening torque :
53.9 ~ 63.7N.m (5.5 ~ 6.5kgf.m, 39.7 ~ 47.0lb-ft)

NOTE

The tensioner pulley bolt has LEFT handed threads.

19. Install the idler (A).

Tightening torque :
53.9 ~ 63.7N.m (5.5 ~ 6.5kgf.m, 39.7 ~ 47.0lb-ft)

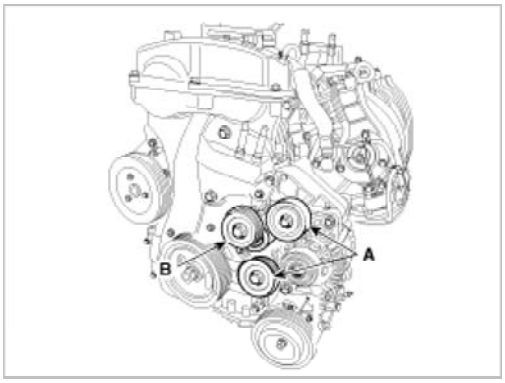

20. Install the air compressor bracket (A).

Tightening torque :
19.6 ~ 23.5N.m (2.0 ~ 2.4kgf.m,13.7 ~ 14.5lb-ft)

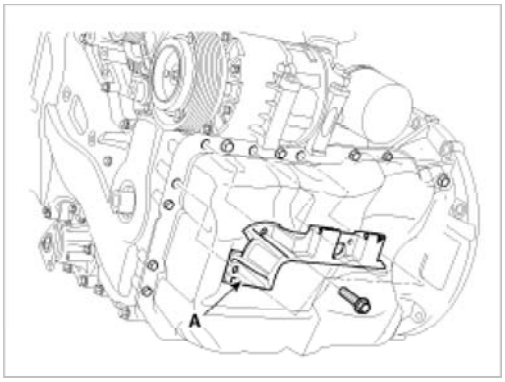

21. Install the air compressor lower bolts.

Tightening torque :
20.0 ~ 32.9N.m (2.04 ~ 3.36kgf.m, 14.8 ~ 24.3lb-ft)

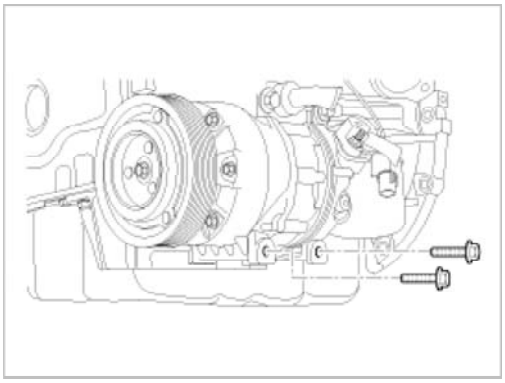

22. Install the drive belt (A).

mcx30.com

pulley.
Rotate the auto tensioner counter - clockwise. With the tensioner turned, install the drive belt on auto tensioner and then release the tensioner.

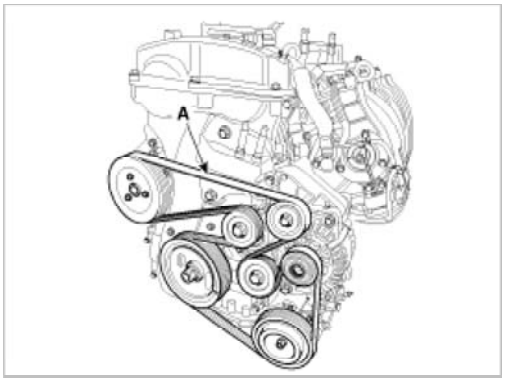

23. Install the engine mounting bracket (A) and then connect the ground cable.

Tightening torque :
78.5 ~ 98.1 N.m (8.0 ~ 10.0 kgf.m, 57.9 ~ 72.3 lb-ft)

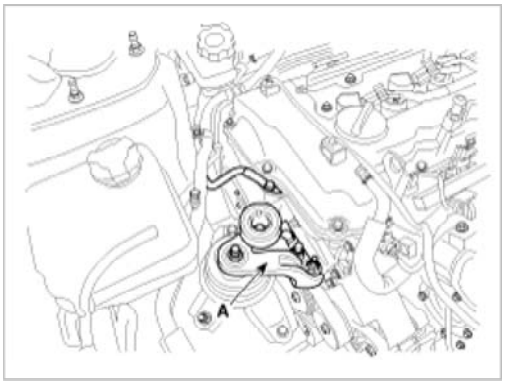

24. Install the RH side cover.

Tightening torque :
8.8 ~ 10.8N.m (0.9 ~ 1.1kgf.m, 6.5 ~ 7.9lb-ft)

25. Install the RH front wheel.

Tightening torque :
88.3 ~ 107.9N.m (9.0 ~ 11.0kgf.m, 65.1 ~ 79.6lb-ft)

26. Install the engine cover (B).
27. Reconnect the battery nagative cable (A).

Tightening torque:
(-) terminal : 4.0 ~ 6.0N.m (0.4 ~ 0.6kgf.m, 3.0 ~ 4.4lb-ft)

mcx30.com

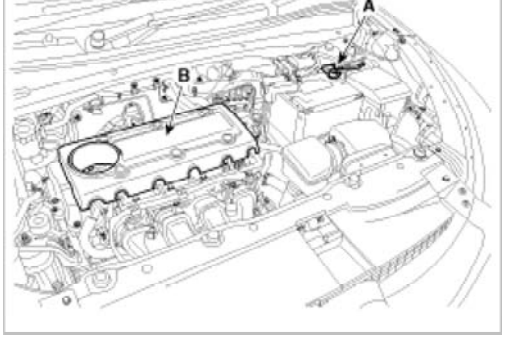

NOTE

- Refill engine oil.
- Clean the battery posts and cable terminals with sandpaper. Assemble and then apply grease to prevent corrosion.
- Inspect for fuel leakage.
- After assembling the fuel line, turn on the ignition switch (do not operate the starter) so that the fuel pump runs for approximately two seconds and fuel line pressurizes.
- Repeat this operation two or three times, then check for fuel leakage at any point in the fuel lines.
- Refill radiator and reservoir tank with engine coolant.
- Bleed air from the cooling system.
- Start engine and let it run until it warms up. (Until the radiator fan operates 3 or 4 times.)
- Turn Off the engine and let it cool down. Check the level in the radiator, add coolant if needed. This will allow trapped air to be removed from the cooling system.
- Put radiator cap on tightly, then run the engine again and check for leaks.

Engine Mechanical System > Cylinder Head Assembly > Cylinder Head > Components and Components Location

Components

mcx30.com

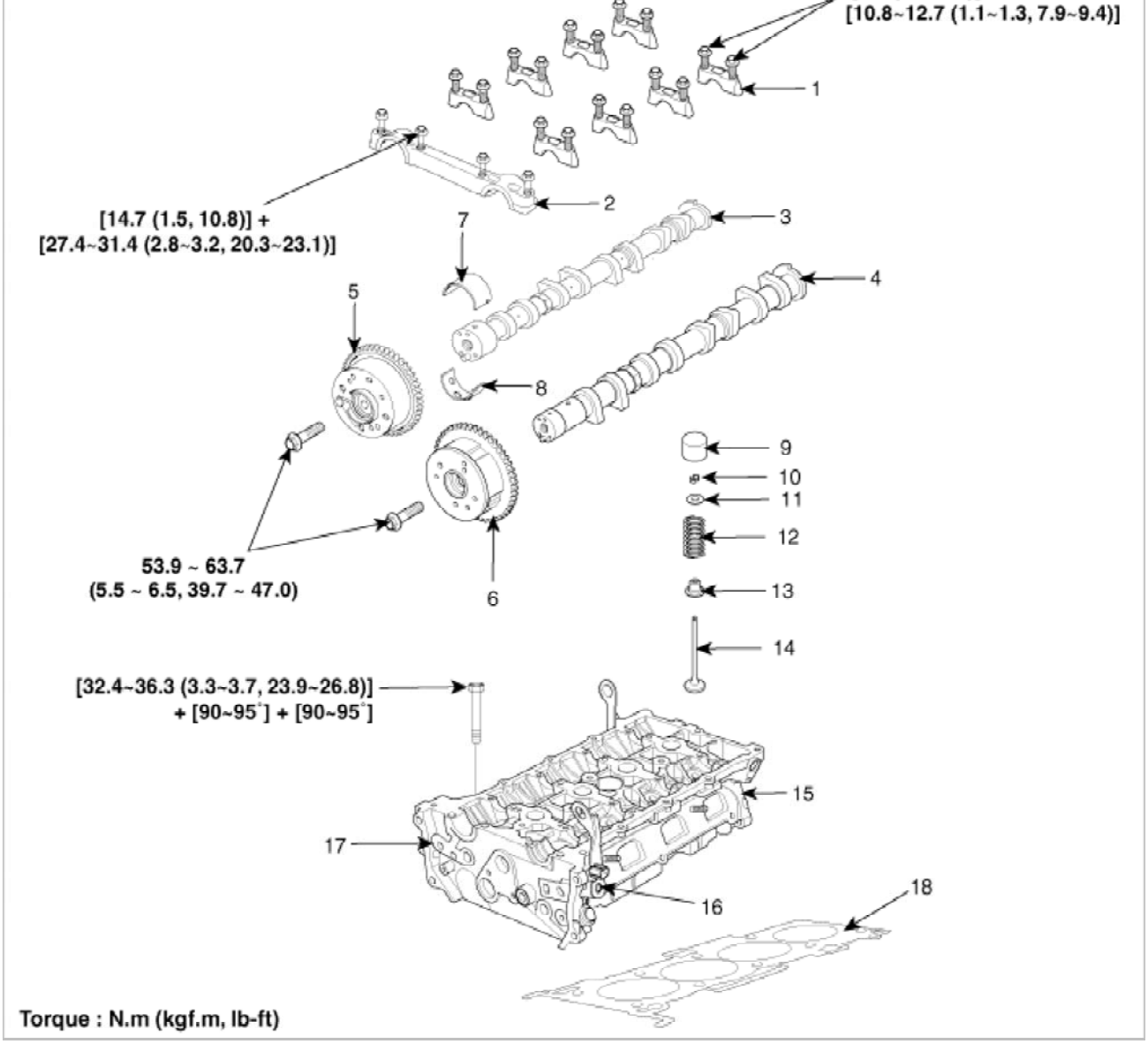

1. Camshaft bearing cap	7. Exhaust camshaft upper bearing	13. Valve stem seal
2. Camshaft front bearing cap	8. Exhaust camshaft lower bearing	14. Valve
3. Exhaust camshaft	9. MLA	15. Cylinder head
4. Intake camshaft	10. Retainer lock	16. Intake OCV
5. Exhaust CVVT assembly	11. Retainer	17. Exhaust OCV
6. Intake CVVT assembly	12. Valve spring	18. Cylinder head gasket

Engine Mechanical System > Cylinder Head Assembly > Cylinder Head > Repair procedures

Removal

CAUTION

- Use fender covers to avoid damaging painted surfaces.
- To avoid damaging the cylinder head, wait until the engine coolant temperature drops below normal temperature (20°C [68°F]) before removing it.
- When handling a metal gasket, take care not to fold the gasket or damage the contact surface of the gasket.
- To avoid damage, unplug the wiring connectors carefully while holding the connector portion.

mcx30.com

NOTE

- Mark all wiring and hoses to avoid misconnection.
- Turn the crankshaft pulley so that the No. 1 piston is at top dead center.

1. Disconnect the battery negative terminal (A).
2. Remove the engine cover (B).
3. Remove the air duct (C).

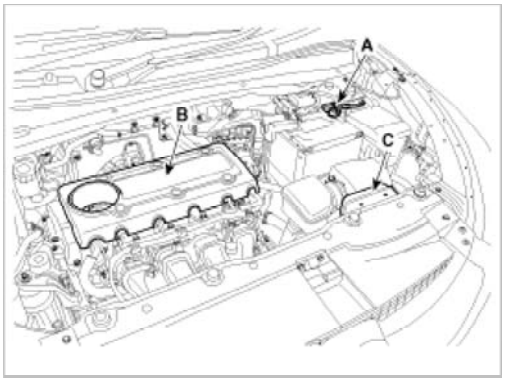

4. Disconnect the breather hose (A), air intake hose (B) and then remove the air cleaner assembly (C).
5. Disconnect the battery positive terminal and then remove the battery (D).

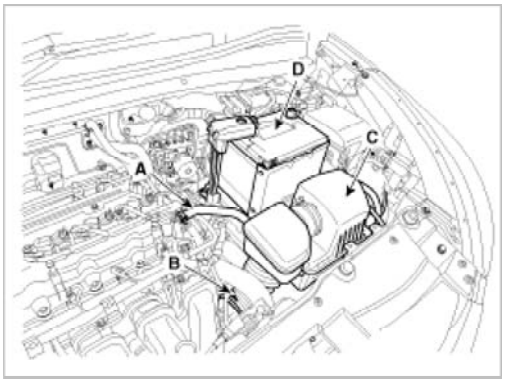

6. Remove the under cover (A).

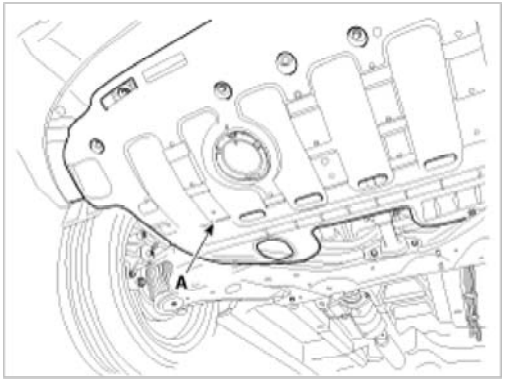

7. Loosen the drain plug (A), and drain the coolant.
   Remove the radiator cap to speed draining.

mcx30.com

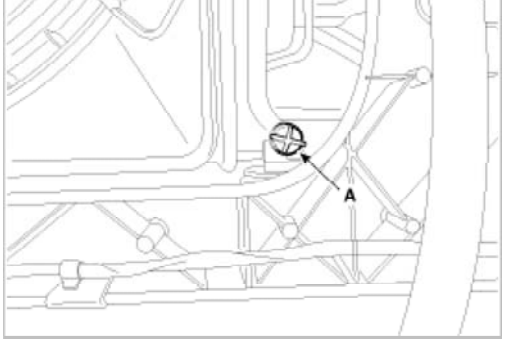

WARNING

Never remove the radiator cap when the engine is hot. Serious scalding could be caused by hot fluid under high pressure escaping from the radiator.

8. Remove the radiator upper hose (A) and lower hose (B).

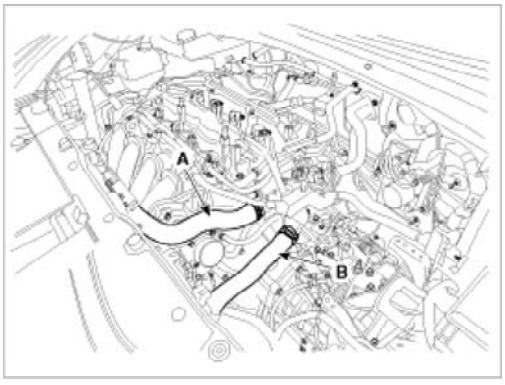

9. Disconnect the wiring connectors, harness clamps from the engine.
   (1) OCV connector (A)

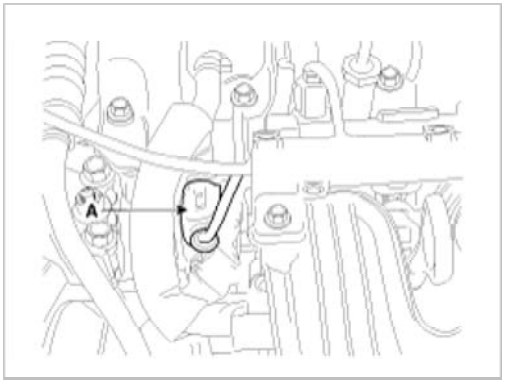

   (2) VIS connector (A)
   (3) Oil pressure switch (B)
   (4) Knock sensor connector (C)
   (5) A/C compressor switch connector (D)
   (6) Alternator connector (E)

mcx30.com

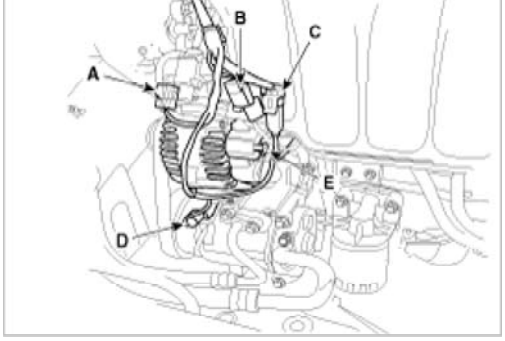

(7) Injector connectors (A)

(8) Ignition coil connectors (B)

(9) Intake CMPS connector (C)

(10) Exhaust CMPS connector (D)

(11) Exhaust OCV connector (E)

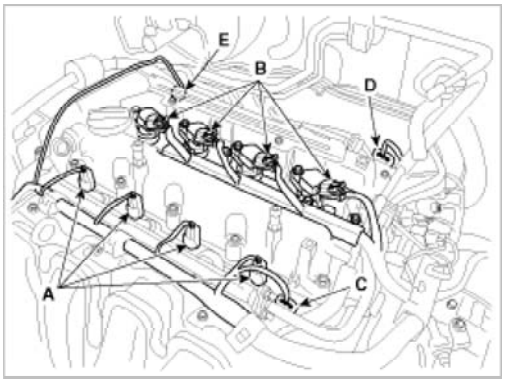

(12) VCM connector (A)

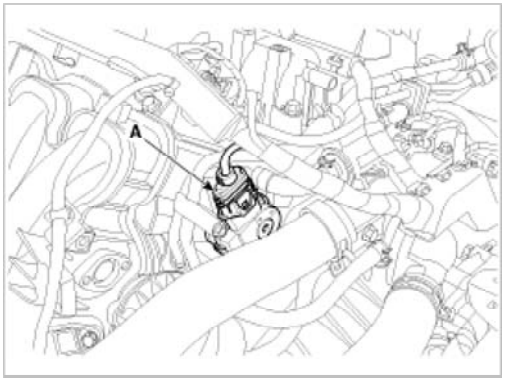

(13) ETC connector (A)

(14) MAP & IATS connector (B)

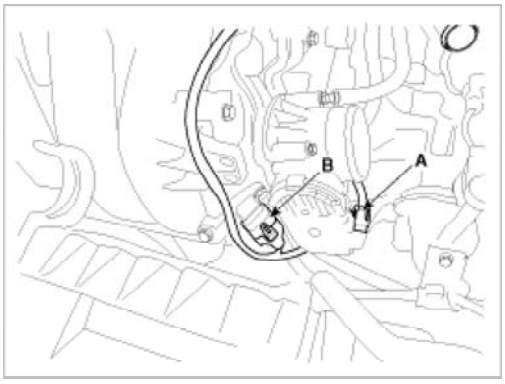

(15) PCSV connector (A)

mcx30.com

(17) Condenser connector (C)

(18) CKP sensor connector (D)

(19) Oxygen sensor connector (E)

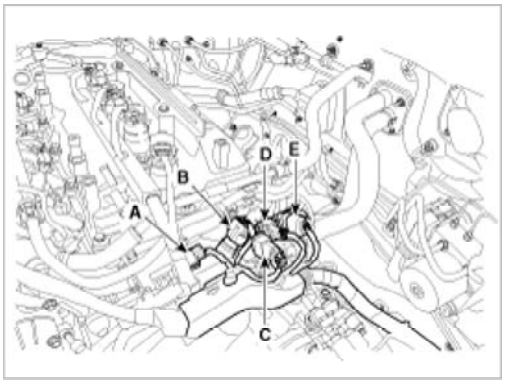

10. Disconnect the fuel hose (A), brake booster vacuum hose (B) and heater hoses (C).

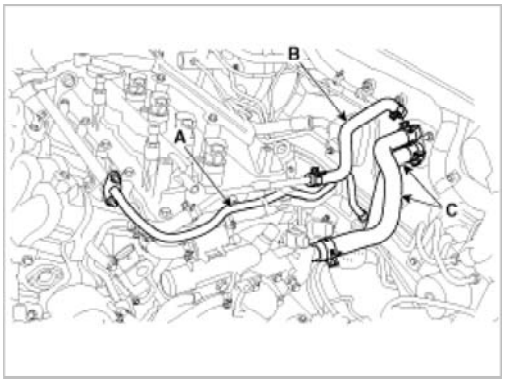

11. Disconnect the throttle body coolant hoses (A).

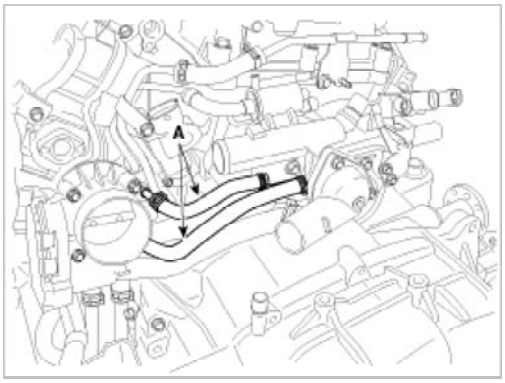

12. Remove the water inlet pipe mounting bolt (A).

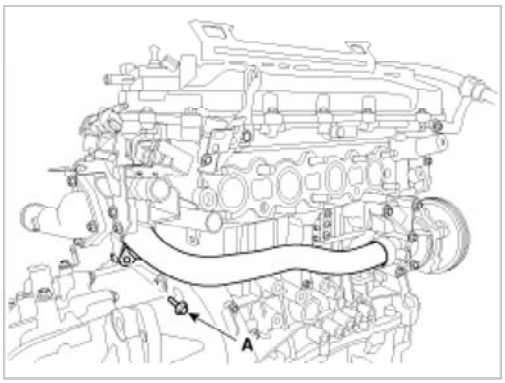

13. Disconnect the oil cooler hoses (A) and then remove the water temperature control assembly (B).

mcx30.com

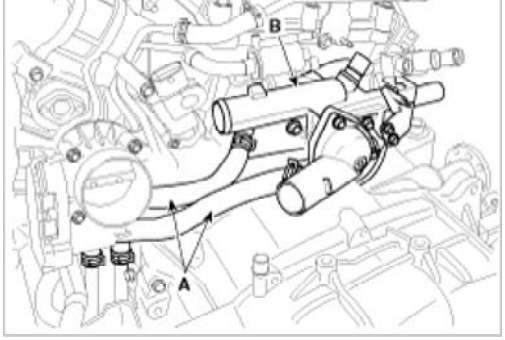

14. Remove the timing chain. (Refer to Timing system in this group)
15. Remove the intake & exhaust manifold. (Refer to Intake and exhaust system in this group)
16. Remove the intake & exhaust CVVT assembly.

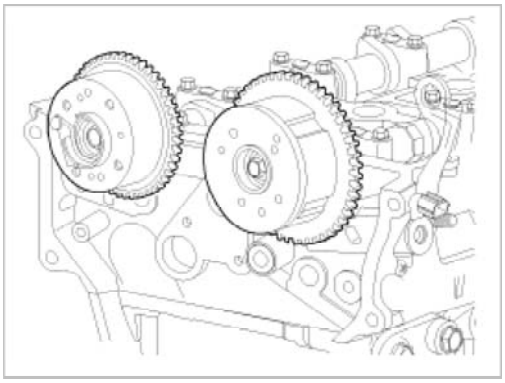

17. Remove the cam shaft.
    A. Remove the front cam shaft bearing cap (A).

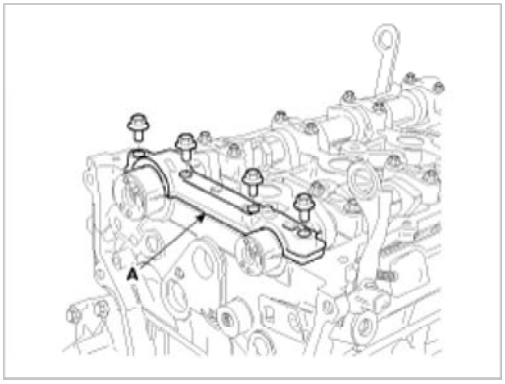

    B. Remove the exhaust cam shaft upper bearing (A).

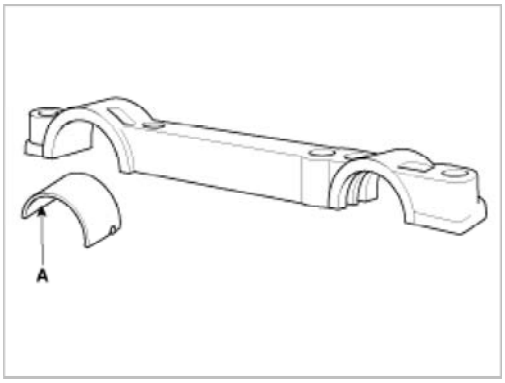

    C. Remove camshaft bearing cap (A), in the sequence shown.

mcx30.com

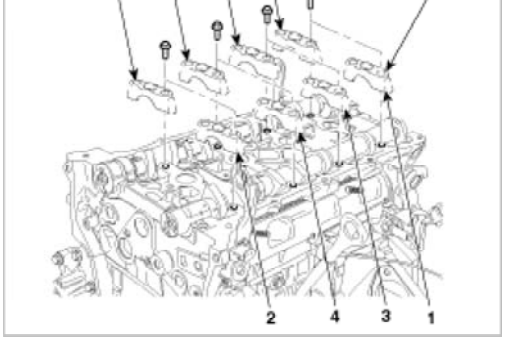

D. Remove the cam shaft (A).

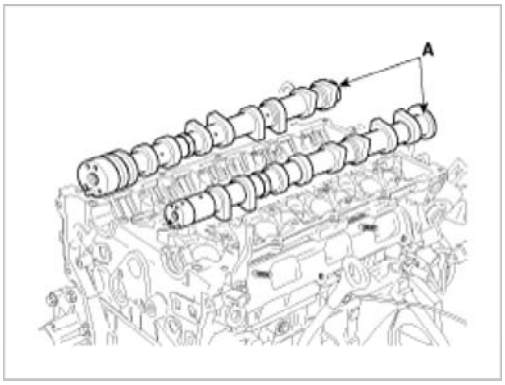

E. Remove the exhaust cam shaft lower bearing (A).

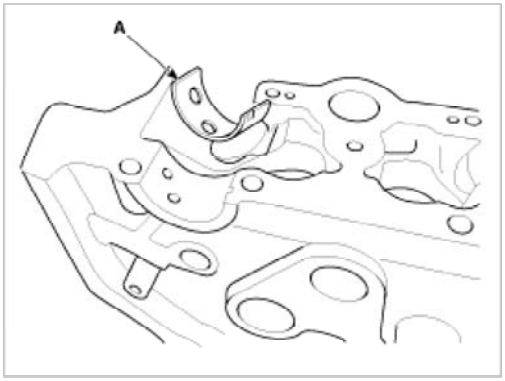

18. Use a torx wrench, remove the intake OCV (A).

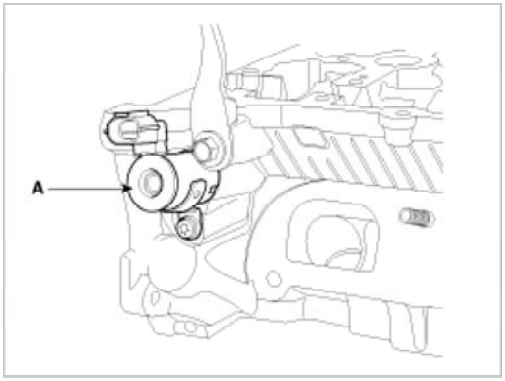

19. Remove the exhaust OCV.

mcx30.com

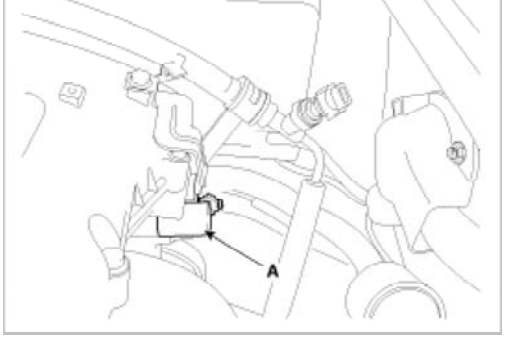

20. Remove the cylinder head bolts, then remove the cylinder head.
    A. Using triple square wrench, uniformly loosen and remove the 10 cylinder head bolts, in several passes, in the sequence shown.

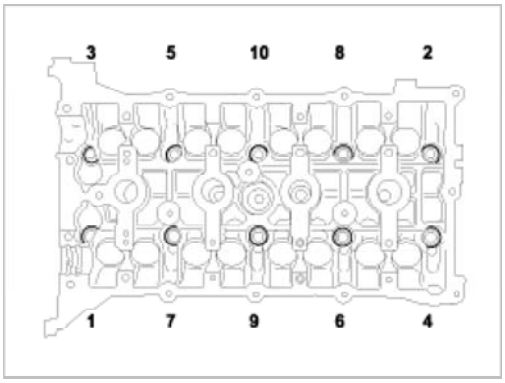

> **CAUTION**
>
> Head warpage or cracking could result from removing bolts in an incorrect order.

    B. Lift the cylinder head from the dowels on the cylinder block and place the cylinder head on wooden blocks on a bench.

> **CAUTION**
>
> Be careful not to damage the contact surfaces of the cylinder head and cylinder block.

21. Remove the cylinder head gasket.

Disassembly

> **NOTE**
>
> Identify MLA(Mechanical Lash Adjuster), valves, valve springs as they are removed so that each item can be reinstalled in its original position.

1. Remove MLAs(A).

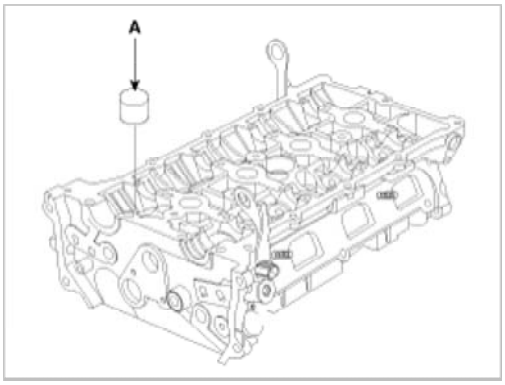

2. Remove valves.

mcx30.com

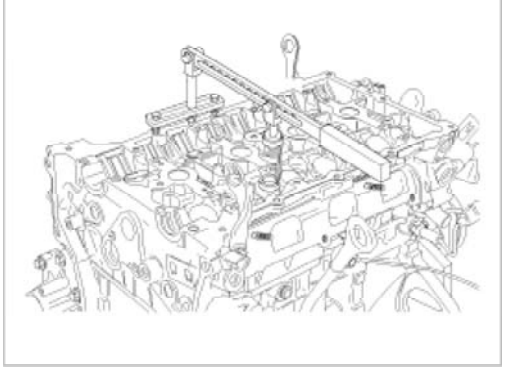

(2) Remove the spring retainer.

(3) Remove the valve spring.

(4) Remove the valve.

(5) Using needle-nose pliers, remove the valve stem seal.

Inspection

Cylinder Head

1. Inspect for flatness.
   Using a precision straight edge and feeler gauge, measure the surface the contacting the cylinder block and the manifolds for warpage.

Flatness of cylinder head gasket surface
Standard : Less than 0.05mm(0.002in.)

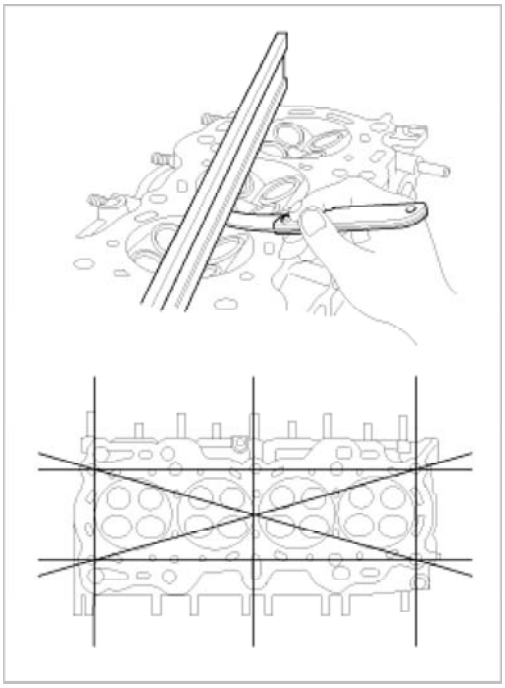

2. Inspect for cracks.
   Check the combustion chamber, intake ports, exhaust ports and cylinder block surface for cracks. If cracked, replace the cylinder head.

Valve And Valve Spring

1. Inspect valve stems and valve guides.
   (1) Using a caliper gauge, measure the inside diameter of the valve guide.

Valve guid I.D.

mcx30.com

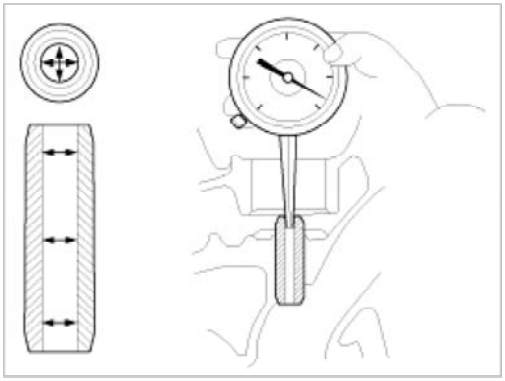

(2) Using a micrometer, measure the diameter of the valve stem.

Valve stem O.D.
Intake : 5.465 ~ 5.480mm (0.2151 ~ 0.2157in.)
Exhaust : 5.458 ~ 5.470mm (0.2149 ~ 0.2153in.)

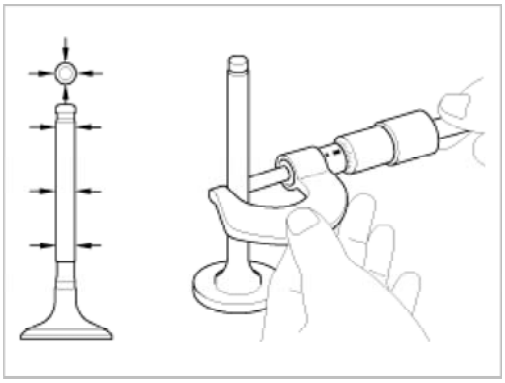

(3) Subtract the valve stem diameter measurement from the valve guide inside diameter measurement.

Valve stem-to-guide clearance
[Standard]
Intake : 0.020 ~ 0.047mm (0.0008 ~ 0.0018in.)
Exhaust : 0.030 ~ 0.054mm (0.0012 ~ 0.0021in.)
[Limit]
Intake : 0.07mm (0.0027in.)
Exhaust : 0.09mm (0.0035in.)

If the clearance is greater than maximum, replace the valve and valve guide.

2. Inspect valves.
   (1) Check the valve is ground to the correct valve face angle.
   (2) Check that the surface of the valve for wear.
   If the valve face is worn, replace the valve.
   (3) Check the valve head margin thickness.
   If the margin thickness is less than minimum, replace the valve.

Margin
[Standard]
Intake : 1.02mm(0.0401in.)
Exhaust : 1.09mm(0.0429in.)

mcx30.com

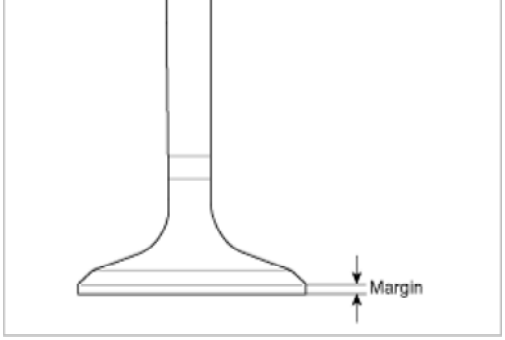

(4) Check the valve length.

Valve length
[Standard]
Intake : 113.18mm (4.456in.)
Exhaust : 105.84mm (4.167in.)
[Limit]
Intake : 112.93mm (4.446in.)
Exhaust : 105.59mm (4.157in.)

(5) Check the surface of the valve stem tip for wear.
If the valve stem tip is worn, replace the valve.

3. Inspect valve seats
Check the valve seat for evidence of overheating and improper contact with the valve face.
Replace the seat if necessary.
Before reconditioning the seat, check the valve guide for wear. If the valve guide is worn, replace it, then recondition the seat. Recondition the valve seat with a valve seat grinder or cutter. The valve seat contact width should be within specifications and centered on the valve face.

4. Inspect valve springs.
(1) Using a steel square, measure the out-of-square of the valve spring.
(2) Using a vernier calipers, measure the free length of the valve spring.

Valve spring
[Standard]
Free height : 47.44mm (1.8677in.)
Out-of-square : 1.5°

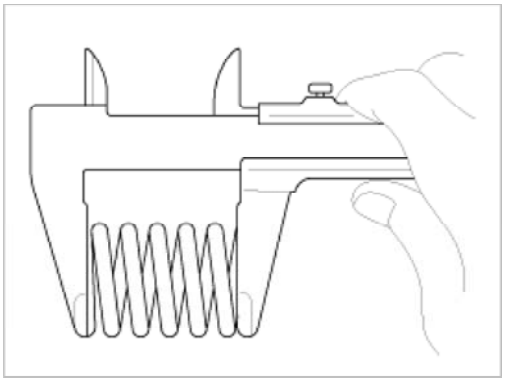

If the free length is not as specified, replace the valve spring.

MLA

1. Inspect MLA.
Using a micrometer, measure the MLA outside diameter.

MLA O.D.
Intake/Exhaust : 31.964 ~ 31.980mm(1.2584 ~ 1.2590in.)

mcx30.com

2. Using a caliper gauge, measure MLA tappet bore inner diameter of cylinder head.

Tappet bore I.D.
Intake/Exhaust : 32.000 ~ 32.025mm(1.2598 ~ 1.2608in.)

3. Subtract MLA outside diameter measurement from tappet bore inside diameter measurement.

MLA to tappet bore clearance
[Standard]
Intake/Exhaust : 0.020 ~ 0.061mm(0.0008 ~ 0.0024in.)
[Limit]
Intake/Exhaust : 0.07mm(0.0027in.)

Camshaft

1. Inspect cam lobes.
   Using a micrometer, measure the cam lobe height.

Cam height
[Standard value]
Intake : 44.10 ~ 44.30mm (1.7362 ~ 1.7440in.)
Exhaust : 44.90 ~ 45.10mm (1.7677 ~ 1.7756in.)

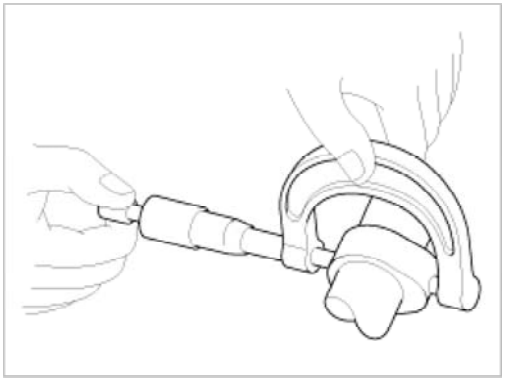

If the cam lobe height is less than standard, replace the camshaft.

2. Inspect camshaft journal clearance.
   (1) Clean the bearing caps and camshaft journals.
   (2) Place the camshafts on the cylinder head.
   (3) Lay a strip of plastigage across each of the camshaft journal.

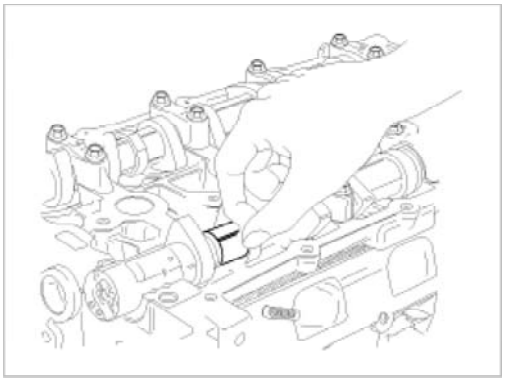

   (4) Install the bearing caps.

> CAUTION
> Do not turn the camshaft.

   (5) Remove the bearing caps.

mcx30.com

Bearing oil clearance
[Standard value]
Intake
No.1 journal : 0.022 ~ 0.057mm (0.0008 ~ 0.0022in.)
No.2,3,4,5, journal : 0.045 ~ 0.082mm (0.0018 ~ 0.0032in.)
Exhaust
No.1 journal : 0 ~ 0.032mm (0 ~ 0.0012in.)
No.2,3,4,5, journal : 0.045 ~ 0.082mm (0.0017 ~ 0.0032in.)
[Limit] :
Intake
No.1 journal : 0.09mm (0.0035in.)
No.2,3,4,5 journal : 0.12mm (0.0047in.)
Exhaust : 0.12mm (0.0047in.)

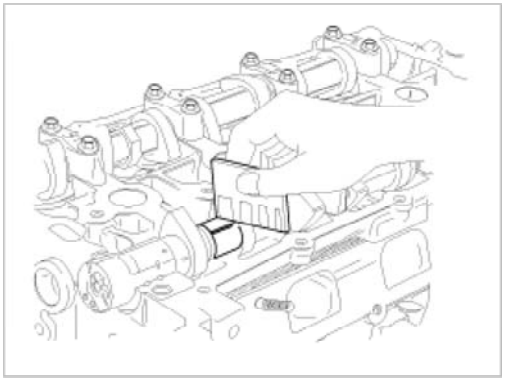

If the oil clearance is greater than maximum, replace the camshaft. If necessary, replace cylinder head.

(7) Completely remove the plastigage.

(8) Remove the camshafts.

3. Inspect camshaft end play.
   (1) Install the camshafts.
   (2) Using a dial indicator, measure the end play while moving the camshaft back and forth.

Camshaft end play
[Standard value] : 0.04 ~ 0.16mm(0.0015 ~ 0.0062in.)
[Limit] : 0.20mm (0.0078in.)

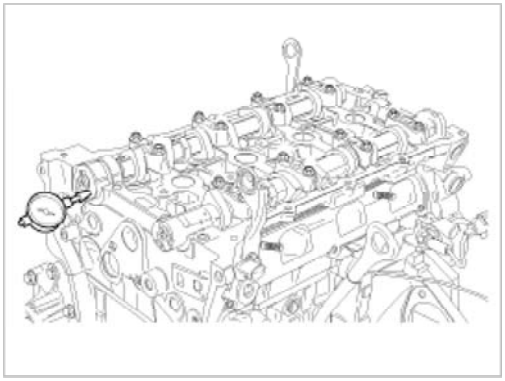

If the end play is greater than maximum, replace the camshaft. If necessary, replace cylinder head.

(3) Remove the camshafts.

Exhaust Cam Shaft Bearing

1. Check the cylinder head bore mark.

Location Of Cylinder Head Bore Mark

mcx30.com

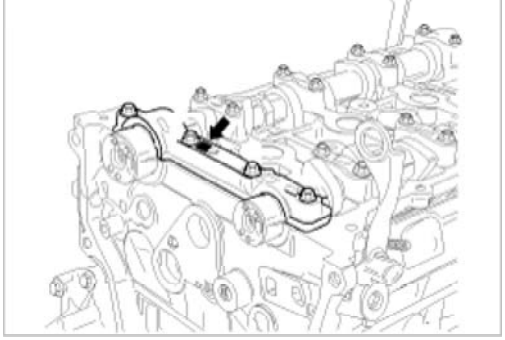

Discrimination Of Cylinder Head

Class	Mark	Exhaust No.1 Inside Diameter Of Cylinder Head Bore
a	A	40.000 ~ 40.008 mm (1.5748 ~ 1.5751 in.)
b	B	40.008 ~ 4.016 mm (1.5751 ~ 1.5754 in.)
c	C	40.016 ~ 40.024 mm (1.5754 ~ 1.5757 in.)

2. Select class of camshaft bearing same as class of cylinder head as shown on the table below.

Place Of Exhaust Cam Shaft Bearing Identification Mark

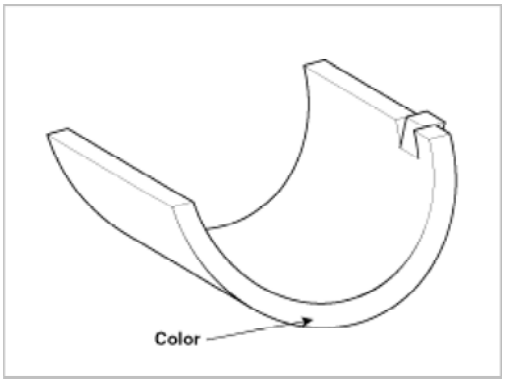

Discrimination Of Exhaust Camshaft Bearing

Cylinder Head Bore Class	Bearing Class For Installing (Color)	Thickness Of Bearing
a (A)	C (Green)	1.996~2.000mm (0.0785~0.0787in.)
b (B)	B (None color)	2.000~2.004mm (0.0787~0.0788in.)
c (C)	A (Black)	2.004~2.008mm (0.0788~0.0790in.)

Oil clearance : 0 ~ 0.032mm (0 ~ 0.0012in.)

CVVT Assembly

1. Inspect CVVT assembly.
   (1) Check that the CVVT assembly will not turn.
   (2) Apply vinyl tape to the retard hole except the one indicated by the arrow in the illustration.
   Verify the hold to tape and the hold to put air in.

[Intake]

mcx30.com

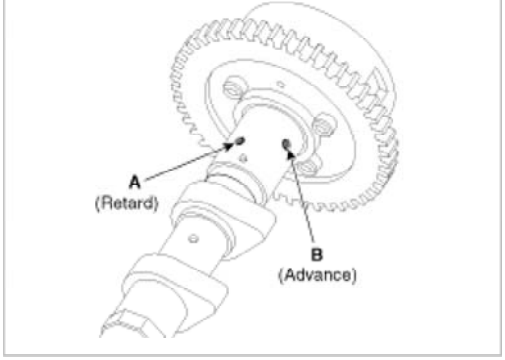

[Exhaust]

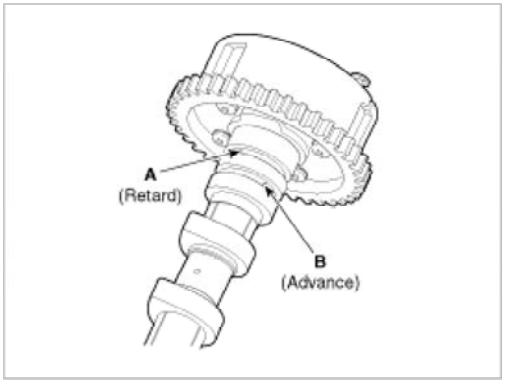

(3) Wind tape around the tip of the air gun and apply air of approx. 150kpa(1.5kgf/cm², 21psi) to the port of the camshaft.
(Perform this in order to release the lock pin.)

> NOTE
>
> When the oil splashes, wipe it off with a shop rag and the likes.

(4) With air applied, as in step (3), turn the CVVT assembly to the advance angle side (the arrow marked direction in the illustration) with your hand.
Depending on the air pressure, the CVVT assembly will turn to the advance side without applying force by hand. Also, under the condition that the pressure can be hardly applied because of the air leakage from the port, there may be the case that the lock pin could be hardly released.

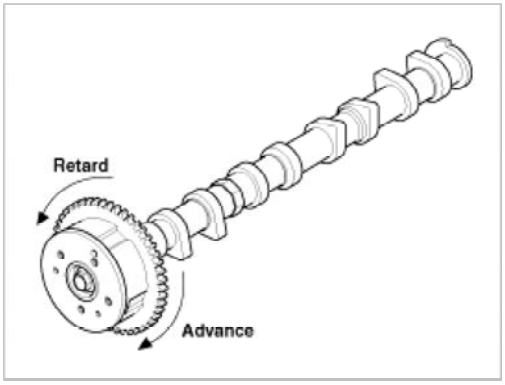

(5) Turn the CVVT assembly back and forth and check the movable range and that there is no disturbance.

Standard:
Should move smoothly in a range from about
22.5° (Intake) / 20.0° (Exhaust)

(6) Turn the CVVT assembly with your hand and lock it at the maximum delay angle position (counter clockwise).

mcx30.com

NOTE

Thoroughly clean all parts to be assembled.
Before installing the parts, apply fresh engine oil to all sliding and rotating surfaces.
Replace oil seals with new ones.

1. Install valves.
   (1) Using SST(09222-4A000), push in a new oil seal.

NOTE

Do not reuse old valve stem seals.
Incorrect installation of the seal could result in oil leakage past the valve guides.

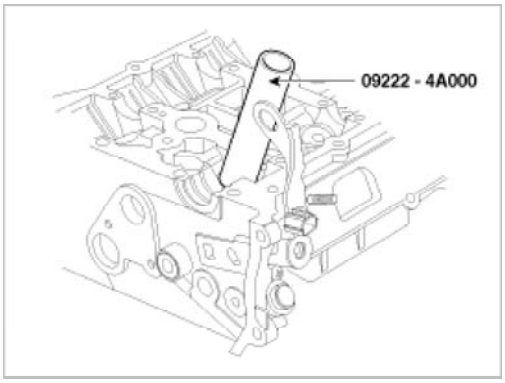

   (2) Install the valve, valve spring and spring retainer.

NOTE

Place valve springs so that the side coated with enamel faces toward the valve spring retainer and then installs the retainer.

   (3) Using the SST(09222-3K000, 09222-3K100), compress the spring and install the retainer locks. After installing the valves, ensure that the retainer locks are correctly in place before releasing the valve spring compressor.

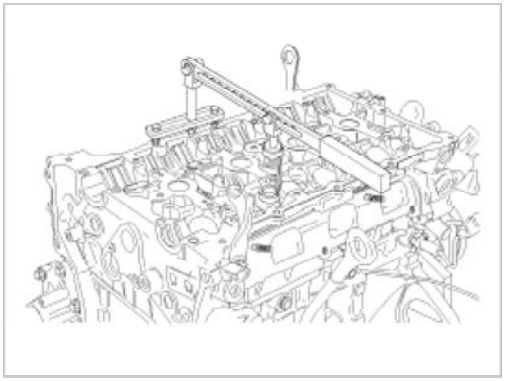

   (4) Lightly tap the end of each valve stem two or three times with the wooden handle of a hammer to ensure proper seating of the valve and retainer lock.

2. Install MLAs.
   Check that the MLA rotates smoothly by hand.

mcx30.com

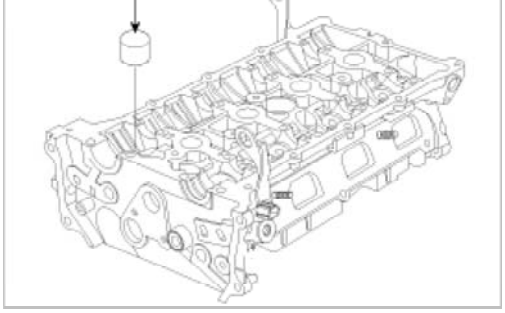

NOTE

MLA can be reinstalled in its original position.

Installation

NOTE

- Thoroughly clean all parts to be assembled.
- Always use a new head and manifold gasket.
- The cylinder head gasket is a metal gasket. Take care not to bend it.
- Rotate the crankshaft, set the No.1 piston at TDC.

1. Install OCV filter.

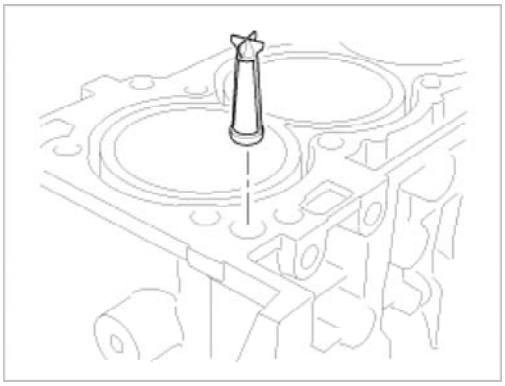

CAUTION

Keep the OCV filter clean.

2. Install the cylinder head gasket(A) on the cylinder block.

NOTE

- Be careful of the installation direction.
- Apply liquid gasket (Loctite 5900H) on the mark (B).
- After applying sealant, assemble the cylinder head in five minutes.

mcx30.com

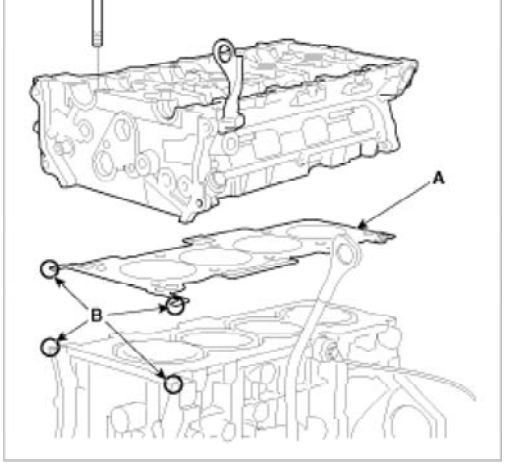

3. Place the cylinder head carefully in order not to damage the gasket with the bottom part of the end.
4. Install cylinder head bolts.
   A. Apply a light coat if engine oil on the threads and under the heads of the cylinder head bolts.
   B. Using hexagon wrench, install and tighten the 10 cylinder head bolts and plate washers, in several passes, in the sequence shown.

Tightening torque :
32.4~36.3Nm (3.3~3.7kgf.m, 23.9~26.8lb-ft) + (90~95°) + (90~95°)

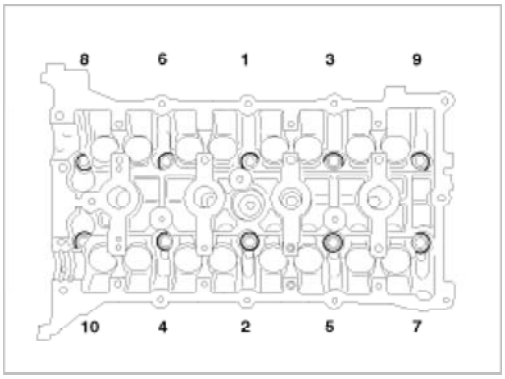

NOTE

Always use new cylinder head bolt.

5. Install the intake OCV (A).

Tightening torque :
9.8 ~ 11.8N.m (1.0 ~ 1.2kgf.m, 7.2 ~ 8.7lb-ft)

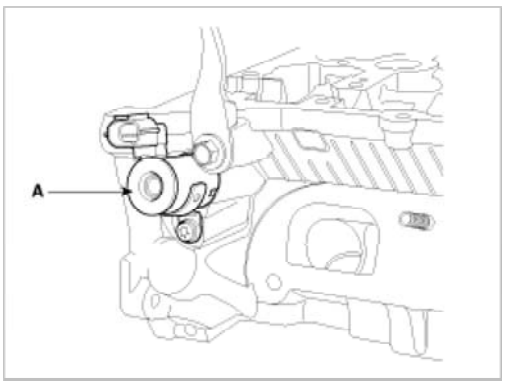

6. Install the exhaust OCV (A).

mcx30.com

9.8 ~ 11.8N.m (1.0 ~ 1.2kgf.m, 7.2 ~ 8.7lb-ft)

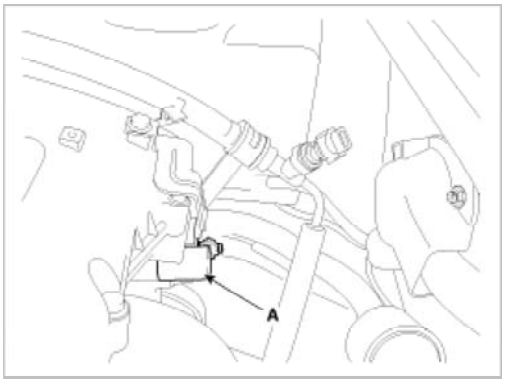

CAUTION

- Do not reuse the OCV when dropped.
- Keep the OCV filter clean.
- Do not hold the OCV sleeve during servicing.
- When the OCV is installed on the engine, do not move the engine with holding the OCV yoke.

7. Install the camshafts.

NOTE

Apply a light coat of engine oil on camshaft journals.

A. Install the exhaust camshaft lower bearing (A).

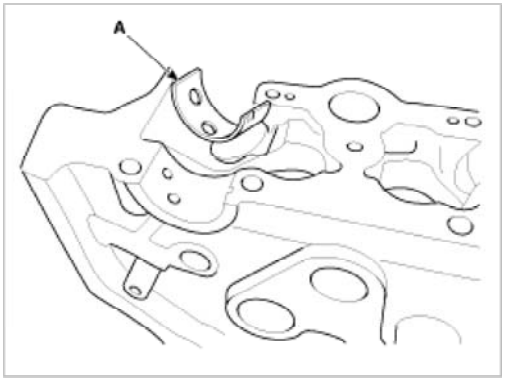

B. Install the camshafts (A).

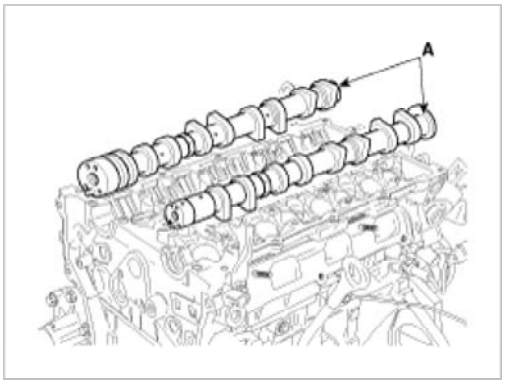

C. Install the exhaust camshaft upper bearing (A).

mcx30.com

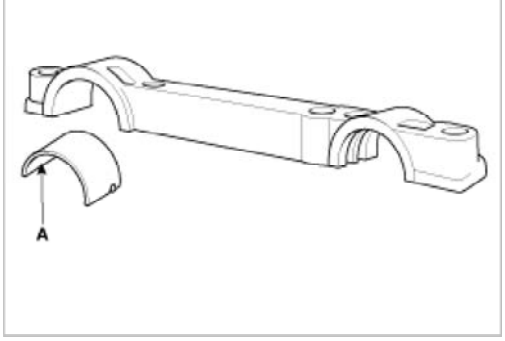

D. Install camshaft bearing caps in their proper locations.
Tightening order.
Group A → Group B → Group C.

Tightening torque
Step 1
M6 : 5.9N.m(0.6kgf.m, 4.3lb-ft)
M8 : 14.7N.m(1.5kgf.m, 10.8lb-ft)
Step 2
M6 : 10.8 ~ 12.7N.m(1.1 ~ 1.3kgf.m, 7.9 ~ 9.4lb-ft)
M8 : 27.5 ~ 31.4N.m(2.8 ~ 3.2kgf.m, 20.3 ~ 23.1lb-ft)

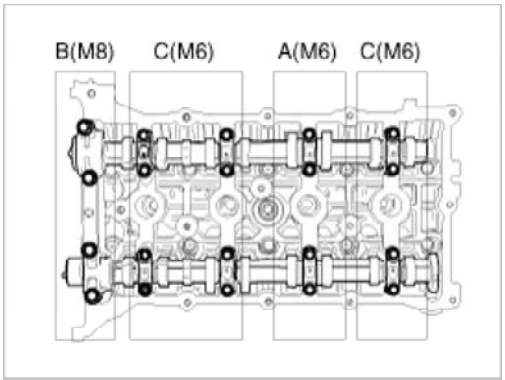

8. Install the water temperature control assembly (B) and then connect the oil cooler hoses (A).

Tightening torque :
Bolts : 14.7 ~ 19.6N.m (1.5 ~ 2.0 kgf.m, 10.8 ~ 14.5 lb-ft)
Nut : 18.6 ~ 23.5N.m (1.9 ~ 2.4 kgf.m, 13.7 ~ 17.4 lb-ft)

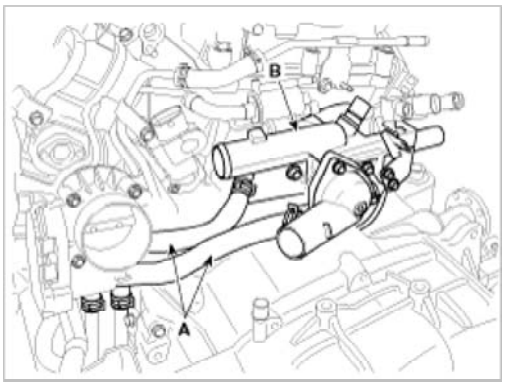

CAUTION

- Assemble water temp control assembly and water inlet pipe to water pump assembly before bolt for assembling of water inlet pipe to be tightened.
- Always use a new O-ring.

mcx30.com

Tightening torque :
9.8 ~ 11.8N.m (1.0 ~ 1.2kgf.m, 7.2 ~ 8.7lb-ft)

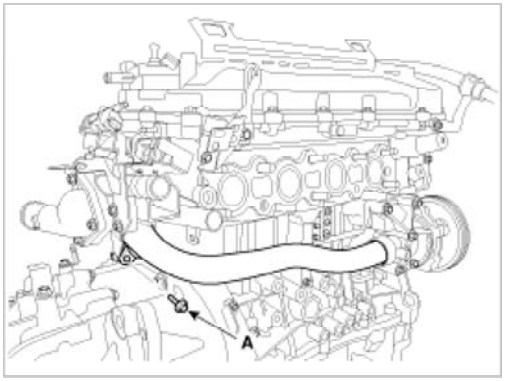

10. Install the timing chain. (Refer to Timing system in this group)
11. Check and adjust valve clearance. (Refer to General information in this group)
12. Install the cylinder head cover.
    A. The hardening sealant located on the upper area between timing chain cover and cylinder head should be removed before assembling cylinder head cover.
    B. After applying sealant, it should be assembled within 5 minutes.

    Bead width : 2.5mm(0.1in.)
    Sealant : LOCTITE 5900H

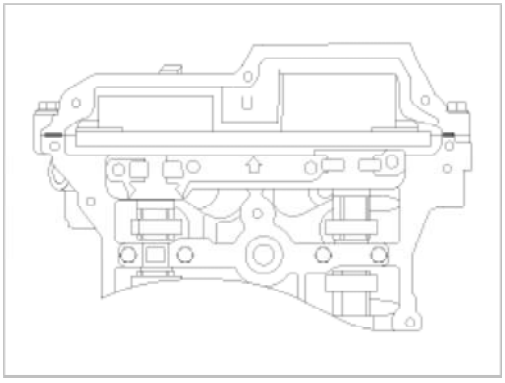

    C. Running the engine or performing a pressure test should not be performed within 30 minutes of assembly
    D. Install the cylinder head cover bolts in the following sequence.

    Tightening torque :
    Step 1 : 3.9 ~ 5.9N.m(0.4 ~ 0.6kgf.m, 2.9 ~ 4.3lb-ft)
    Step 2 : 7.8 ~ 9.8N.m(0.8 ~ 1.0kgf.m, 5.8 ~ 7.2lb-ft)

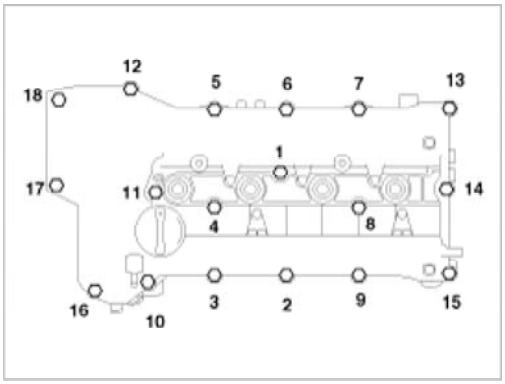

mcx30.com

CAUTION

Do not reuse cylinder head cover gasket.

13. Install the intake & exhaust manifold. (Refer to Intake and exhaust system in this group)
14. Connect the throttle body coolant hoses (A).

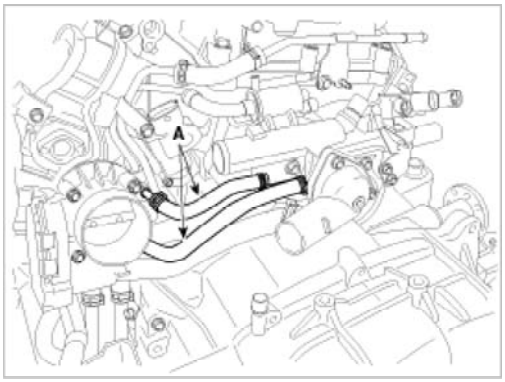

15. Connect the fuel hose (A), the brake booster vacuum hose (B) and heater hoses (C).

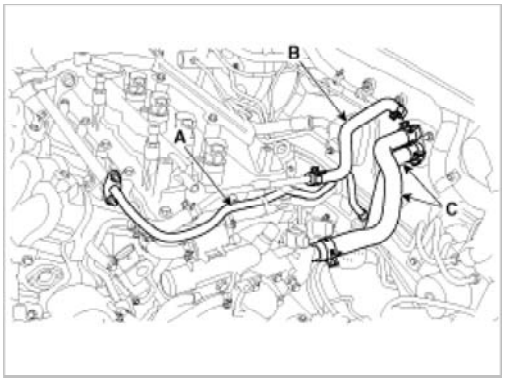

16. Connect the wiring connectors and harness clamps.
    (1) OCV connector (A)

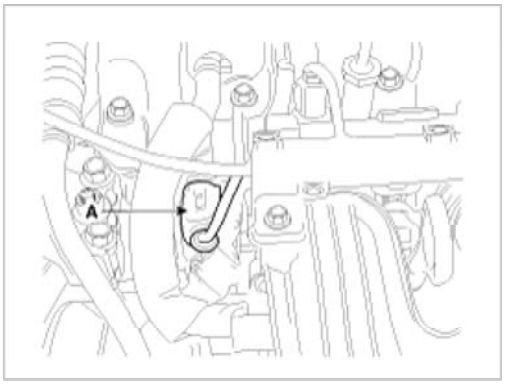

    (2) VIS connector (A)
    (3) Oil pressure switch (B)
    (4) Knock sensor connector (C)
    (5) A/C compressor switch connector (D)
    (6) Alternator connector (E)

mcx30.com

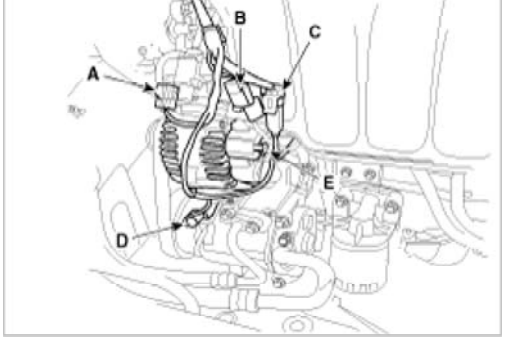

(7) Injector connectors (A)

(8) Ignition coil connectors (B)

(9) Intake CMPS connector (C)

(10) Exhaust CMPS connector (D)

(11) Exhaust OCV connector (E)

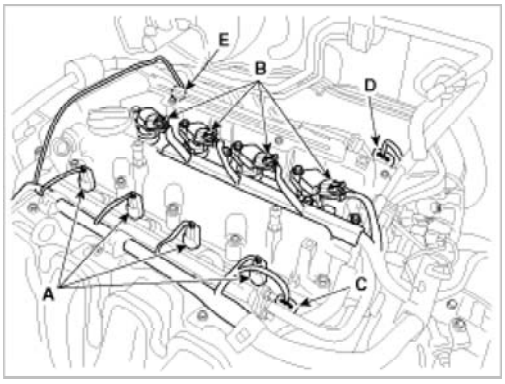

(12) VCM connector (A)

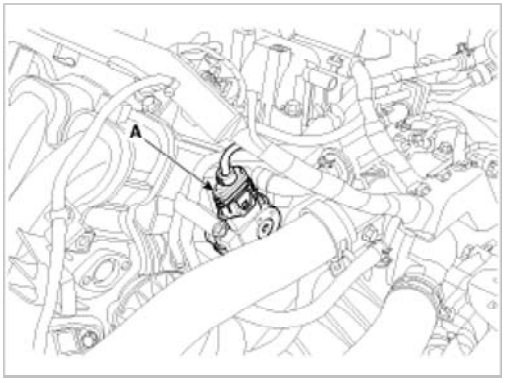

(13) ETC connector (A)

(14) MAP & IATS connector (B)

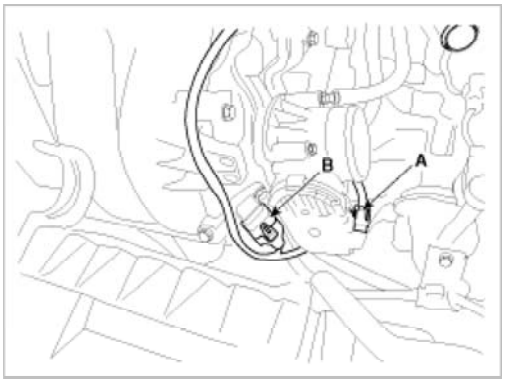

(15) PCSV connector (A)

mcx30.com

(17) Condenser connector (C)

(18) CKP sensor connector (D)

(19) Oxygen sensor connector (E)

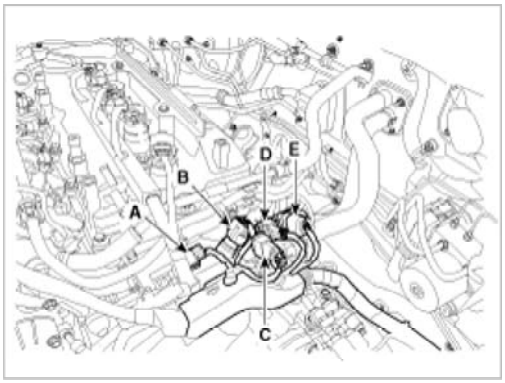

17. Connect the radiator upper hose (A) and low hose (B).

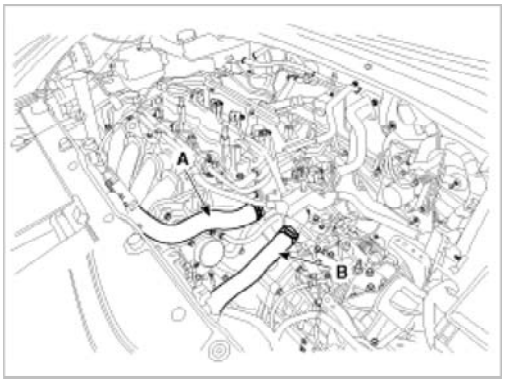

18. Install the under cover (A).

Tightening torque:
19.6 ~ 24.5 N.m (2.0 ~ 2.5 kgf.m, 14.5 ~ 18.1 lb-ft)

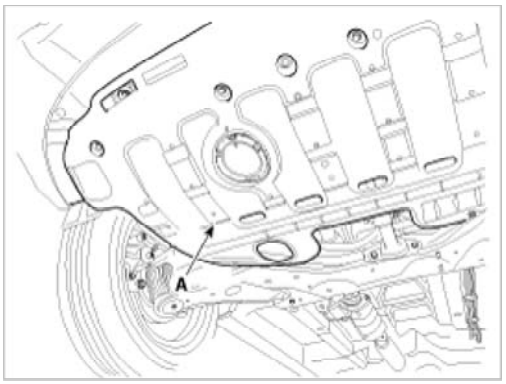

19. Install the battery (D) and connect the battery positive terminal.

Tightening torque:
(+) terminal : 7.8 ~ 11.8 N.m (0.8 ~ 1.2 kgf.m, 5.8 ~ 8.7 lb-ft)
Bracket bolt : 9.8 ~ 11.8 N.m (1.0 ~ 1.2 kgf.m, 7.2 ~ 8.7 lb-ft)

20. Install the air cleaner assembly (C) and then connect the air intake hose (B) and breather hose (A).

Tightening torque
Hose clamp bolt:
2.9 ~ 4.9 N.m (0.3 ~ 0.5 kgf.m, 2.2 ~ 3.6 lb-ft)
Air cleaner assembly bolts:

mcx30.com

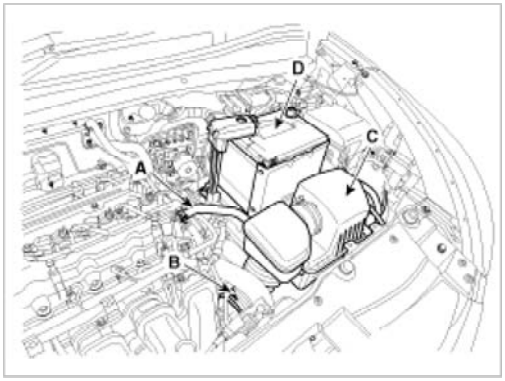

21. Install the air duct (C).
22. Install the engine cover (B).
23. Connect the battery negative terminal (A).

Tightening torque:
(-) terminal : 4.0 ~ 6.0 N.m (0.4 ~ 0.6 kgf.m, 3.0 ~ 4.4 lb-ft)

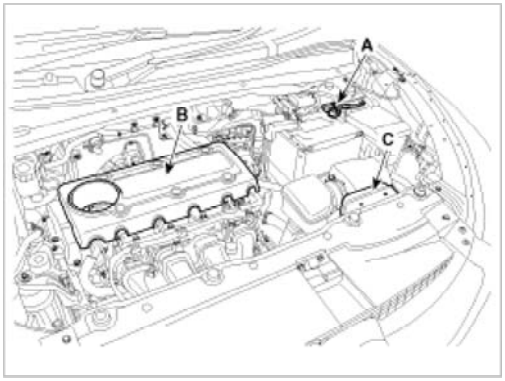

NOTE

- Refill engine oil.
- Clean the battery posts and cable terminals with sandpaper. Assemble and then apply grease to prevent corrosion.
- Inspect for fuel leakage.
- After assembling the fuel line, turn on the ignition switch (do not operate the starter) so that the fuel pump runs for approximately two seconds and fuel line pressurizes.
- Repeat this operation two or three times, then check for fuel leakage at any point in the fuel lines.
- Refill radiator and reservoir tank with engine coolant.
- Bleed air from the cooling system.
- Start engine and let it run until it warms up. (Until the radiator fan operates 3 or 4 times.)
- Turn Off the engine and let it cool down. Check the level in the radiator, add coolant if needed. This will allow trapped air to be removed from the cooling system.
- Put radiator cap on tightly, then run the engine again and check for leaks.

Engine Mechanical System > Cylinder Block > Cylinder Block > Components and Components Location

Components

mcx30.com

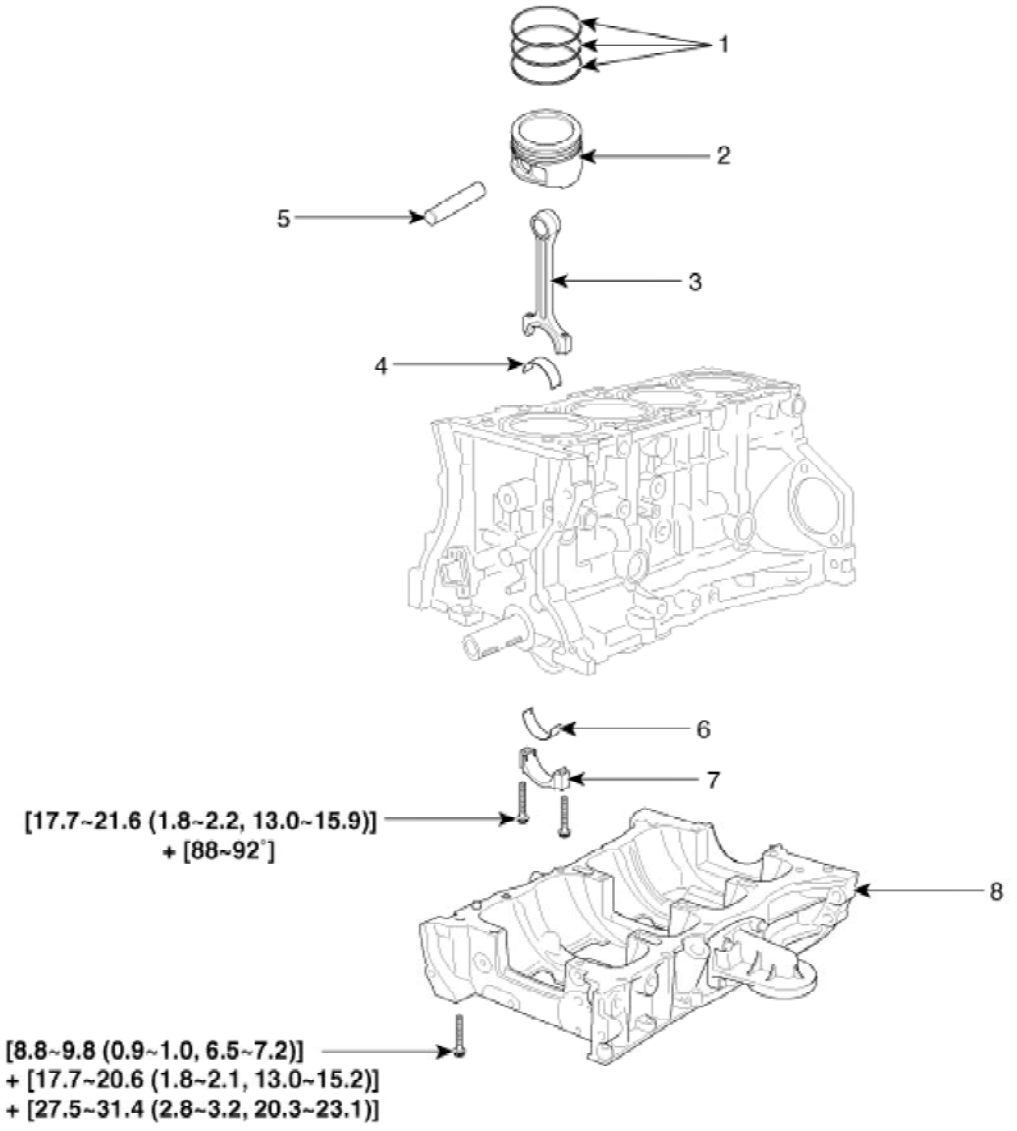

Torque : N.m (kgf.m, lb-ft)

1. Piston ring	5. Piston pin
2. Piston	6. Connecting rod lower bearing
3. Connecting rod	7. Connecting rod bearing cap
4. Connecting rod upper bearing	8. Ladder frame

mcx30.com

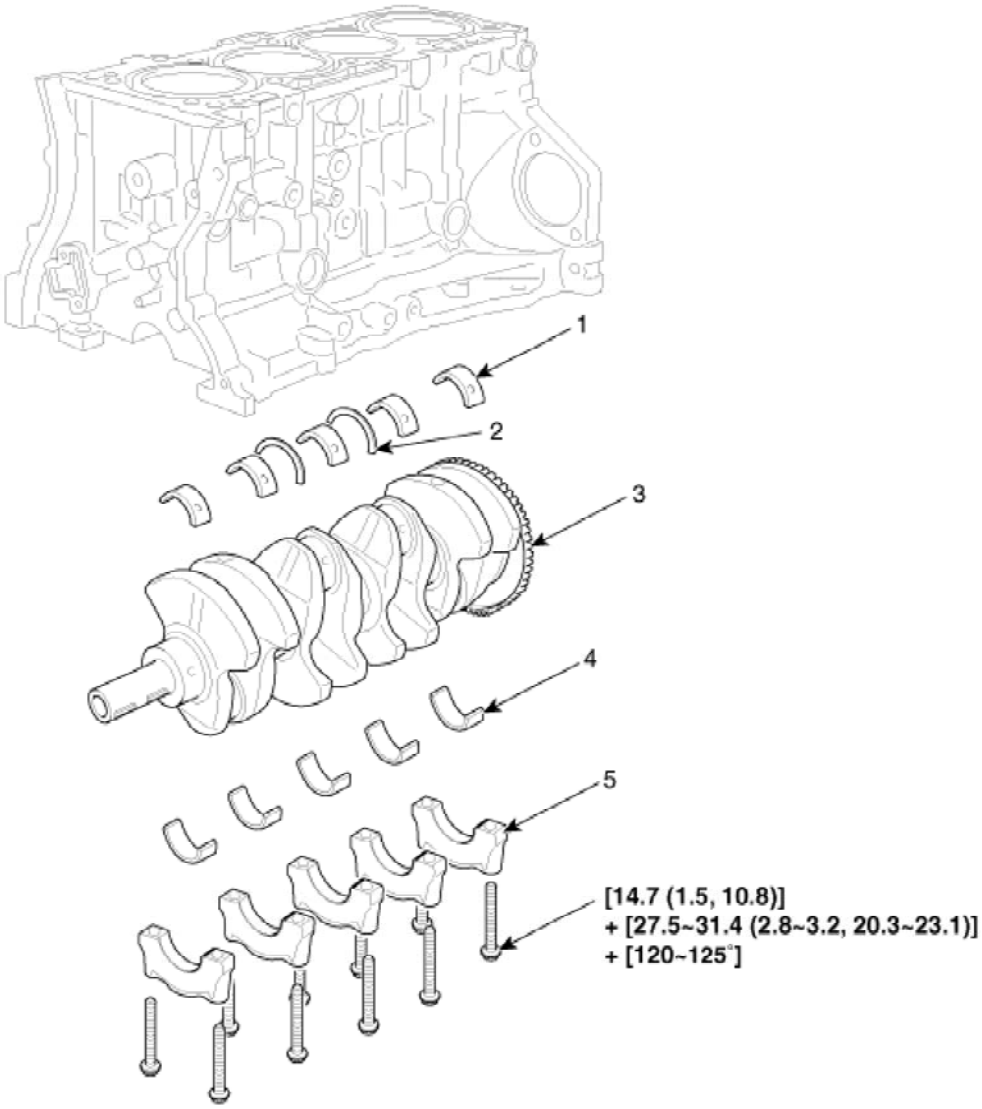

Torque : N.m (kgf.m, lb-ft)

1. Crankshaft upper bearing 2. Thrust bearing 3. Crankshaft	4. Crankshaft lower bearing 5. Main bearing cap

Engine Mechanical System > Cylinder Block > Cylinder Block > Repair procedures

Disassembly

1. M/T : remove flywheel.
2. A/T : remove drive plate.
3. Attach the engine to an engine stand for disassembly.
4. Remove timing chain. (Refer to Timing system in this group)
5. Remove cylinder head. (Refer to Cylinder block in this group)
6. Remove the oil dip stick (A).

mcx30.com

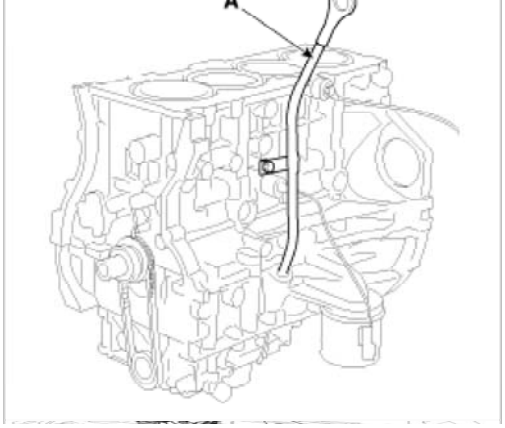

7. Remove knock sensor(A).

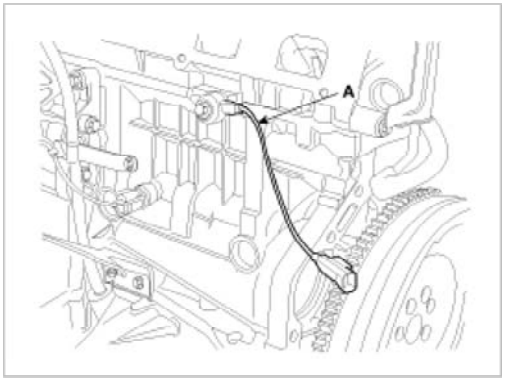

8. Remove oil pressure sensor(A).

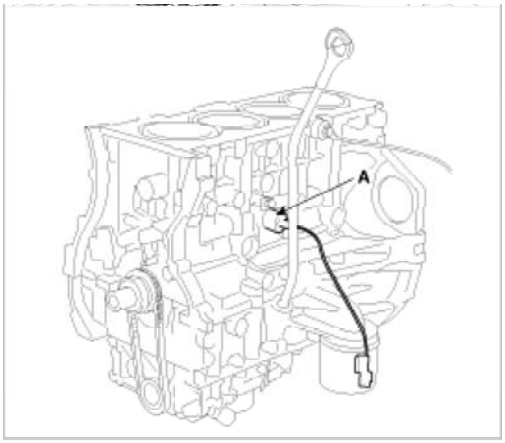

9. Remove the sensor cover and the CKP sensor(A).

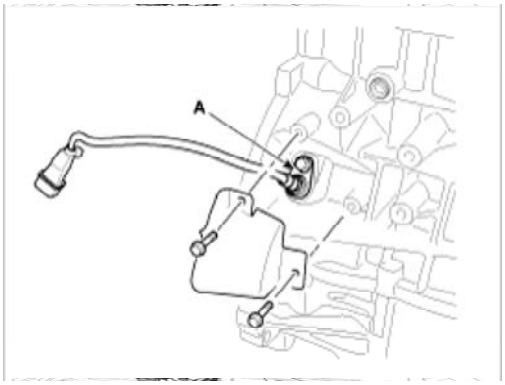

10. Remove water pump.
11. Remove balance shaft module (oil pump).
12. Remove ladder frame(A).

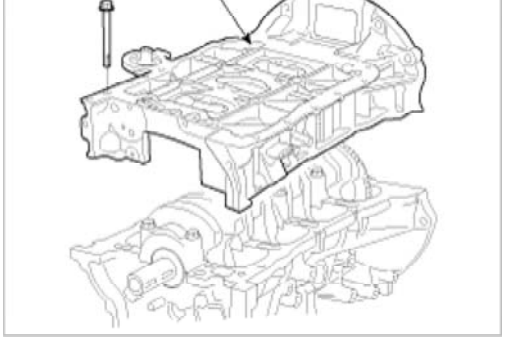

13. Check the connecting rod end play.
14. Remove the connecting rod caps and check oil clearance.
15. Remove piston and connecting rod assemblies.
    (1) Using a ridge reamer, remove all the carbon from the top of the cylinder.
    (2) Push the piston, connecting rod assembly and upper bearing through the top of the cylinder block.

> NOTE
> - Keep the bearings, connecting rod and cap together.
> - Arrange the piston and connecting rod assemblies in the correct order.

16. Remove crankshaft bearing cap and check oil clearance.
17. Check the crankshaft end play.
18. Lift the crankshaft(A) out of the engine, being careful not to damage journals.

> NOTE
> Arrange the main bearings and thrust bearings in the correct order.

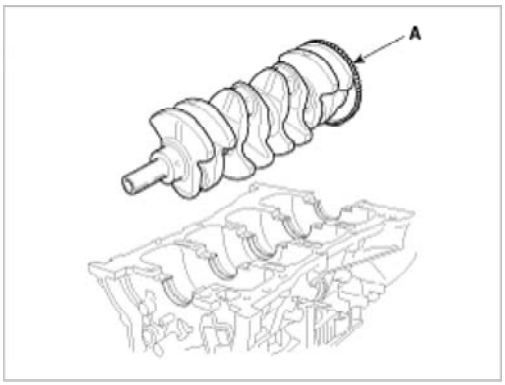

19. Check fit between piston and piston pin.
    Try to move the piston back and forth on the piston pin. If any movement is felt, replace the piston and pin as a set.
20. Remove piston rings.
    (1) Using a piston ring expender, remove the 2 compression rings.
    (2) Remove 2 side rails and the spacer by hand.

> NOTE
> Arrange the piston rings in the correct order only.

21. Disconnect connecting rod from piston.

Inspection

Connecting Rod And Crankshaft

1. Check the connecting rod end play.

mcx30.com

Standard end play : 0.1~ 0.25mm(0.004 ~ 0.010in.)
Maximum end play : 0.35mm(0.0138in.)

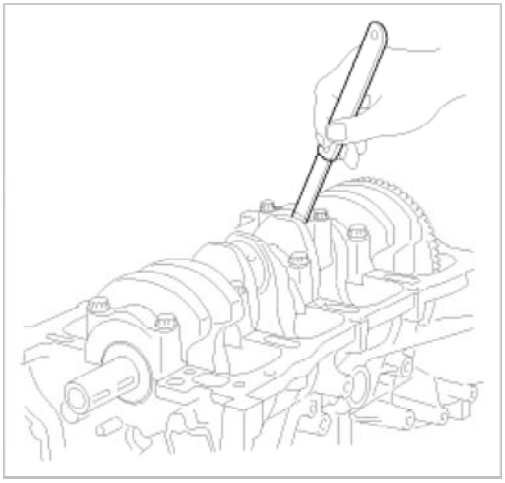

A. If out-of-tolerance, install a new connecting rod.
B. If still out-of-tolerance, replace the crankshaft.

2. Check the connecting road bearing oil clearance.
   (1) Check the matchmarks on the connecting rod and cap are aligned to ensure correct reassembly.
   (2) Remove 2 connecting rod cap bolts.
   (3) Remove the connecting rod cap and bearing half.
   (4) Clean the crank pin and bearing.
   (5) Place plastigage across the crank pin.
   (6) Reinstall the bearing half and cap, and torque the bolts.

Tightening torque
17.7~21.6Nm (1.8~2.2kgf.m, 13.0~15.9lb-ft) + 88~92°

NOTE

Do not turn the crankshaft.

   (7) Remove 2 bolts, connecting rod cap and bearing half.
   (8) Measure the plastigage at its widest point.

Standard oil clearance
0.031 ~ 0.045mm (0.0012 ~ 0.0017in.)

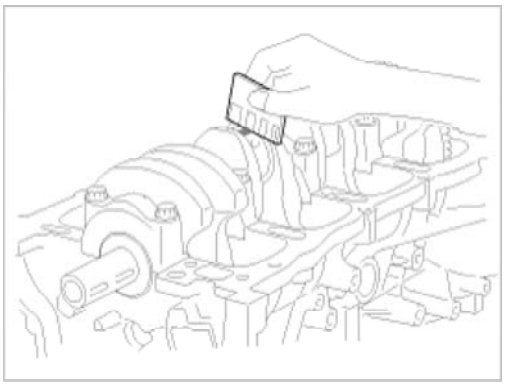

   (9) If the plastigage measures too wide or too narrow, remove the upper half of the bearing, install a new, complete bearing with the same color mark (select the color as shown in the next column), and recheck the clearance.

mcx30.com

CAUTION

Do not file, shim, or scrape the bearings or the caps to adjust clearance.

(10) If the plastigage shows the clearance is still incorrect, try the next larger or smaller bearing (the color listed above or below that one), and check clearance again.

NOTE

If the proper clearance cannot be obtained by using the appropriate larger or smaller bearings, replace the crankshaft and start over.

CAUTION

If the marks are indecipherable because of an accumulation of dirt and dust, do not scrub them with a wire brush or scraper. Clean them only with solvent or detergent.

Connecting Rod Mark Location

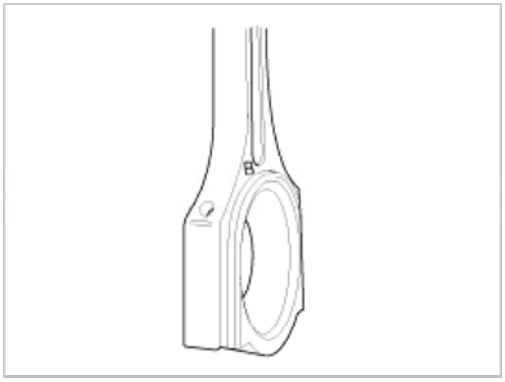

Discrimination Of Connecting Rod

Class	Mark	Inside Diameter
a	A	51.000 ~ 51.006mm (2.0079 ~ 2.0081in.)
b	B	51.006 ~ 51.012mm (2.0081 ~ 2.0083in.)
c	C	51.012 ~ 51.018mm (2.0083 ~ 2.0085in.)

Crankshaft Pin Mark Location Discrimination Of Crankshaft

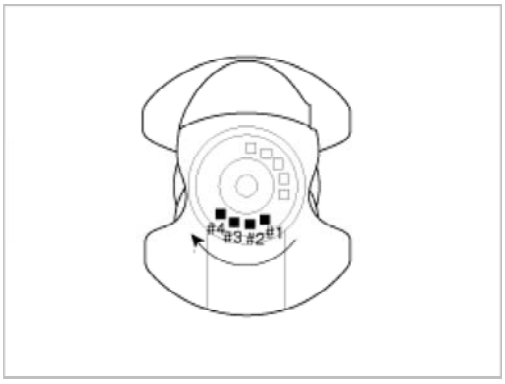

NOTE

Conform to read stamping order as shown arrow direction from #1.

Discrimination Of Crankshaft

Class	Mark	Outside Diameter Of Pin

mcx30.com

I	1	(1.8884 ~ 1.8886in.)
II	2	47.960 ~ 47.966mm (1.8881 ~ 1.8884in.)
III	3	47.954 ~ 47.960mm (1.8879 ~ 1.8881in.)

Place Of Identification Mark (Connecting Rod Bearing) Discrimination Of Connecting Rod Bearing

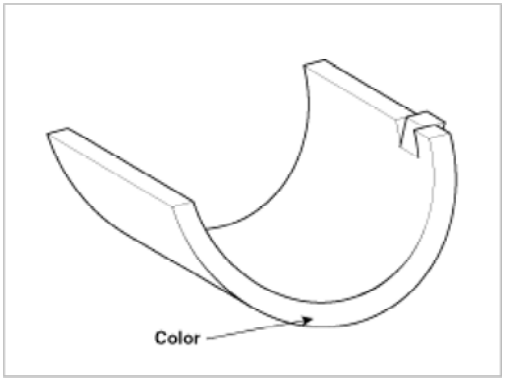

Discrimination Of Connecting Rod Bearing

Class	Mark	Thickness Of Bearing
AA	Blue	1.515 ~ 1.518mm (0.0596 ~ 0.0597in.)
A	Black	1.512 ~ 1.515mm (0.0595 ~ 0.0596in.)
B	None	1.509 ~ 1.512mm (0.0594 ~ 0.0595in.)
C	Green	1.506 ~ 1.509mm (0.0592 ~ 0.0594in.)
D	Yellow	1.503 ~ 1.506mm (0.0591 ~ 0.0592in.)

(11) Selection

Crankshaft Indentification Mark	Connecting Rod Identification Mark	Assembing Classification Of Bearing
I (1)	a (A)	D (Yellow)
	b (B)	C (Green)
	c (C)	B (None)
II (2)	a (A)	C (Green)
	b (B)	B (None)
	c (C)	A (Black)
III (3)	a (A)	B (None)
	b (B)	A (Black)
	c (C)	AA (Blue)

3. Check the crankshaft bearing oil clearance.
   (1) To check main bearing-to-journal oil clearance, remove the main caps and bearing halves.
   (2) Clean each main journal and bearing half with a clean shop tower.

mcx30.com

(4) Reinstall the bearings and caps, then torque the bolts.

Tightening torque
14.7Nm (1.5kgf.m, 10.8lb-ft) + 27.5~31.4Nm (2.8~3.2kgf.m, 20.3~23.1lb-ft) + 120~125°

NOTE

Do not turn the crankshaft.

(5) Remove the cap and bearing again, and measure the widest part of the plastigage.

Standard oil clearance
0.020 ~ 0.038mm (0.0008 ~ 0.0015in.)

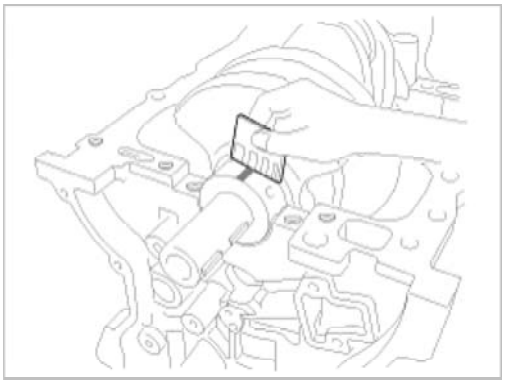

(6) If the plastigage measures too wide or too narrow, remove the upper half of the bearing, install a new, complete bearing with the same color mark (select the color as shown in the next column), and recheck the clearance.

CAUTION

Do not file, shim, or scrape the bearings or the caps to adjust clearance.

(7) If the plastigage shows the clearance is still incorrect, try the next larger or smaller bearing (the color listed above or below that one), and check clearance again.

NOTE

If the proper clearance cannot be obtained by using the appropriate larger or smaller bearings, replace the crankshaft and start over.

CAUTION

If the marks are indecipherable because of an accumulation of dirt and dust, do not scrub them with a wire brush or scraper. Clean them only with solvent or detergent.

Connecting Rods

1. When reinstalling, make sure that cylinder numbers put on the connecting rod and cap at disassembly match. When a new connecting rod is installed, make sure that the notches for holding the bearing in place are on the same side.
2. Replace the connecting rod if it is damaged on the thrust faces at either end. Also if step wear or a severely rough surface of the inside diameter of the small end is apparent, the rod must be replaced as well.
3. Using a connecting rod aligning tool, check the rod for bend and twist. If the measured value is close to the repair limit, correct the rod by a press. Any connecting rod that has been severely bent or distorted should be replaced.

Allowable bend of connecting rod :
0.05mm / 100mm (0.0020 in./3.94 in.) or less
Allowable twist of connecting rod :
0.1mm / 100mm (0.0039 in./3.94 in.) or less

Crankshaft bore mark location

mcx30.com

Use them, and the numbers of bar stamped on the crank (marks for main journal size), to choose the correct bearings.

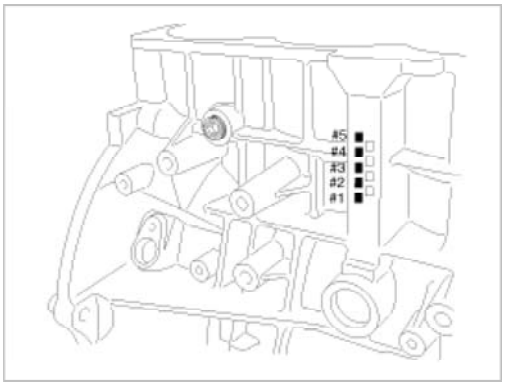

Discrimination Of Cylinder Block

Calss	Mark	Inside Diameter
a	A	56.000 ~ 56.006mm (2.2047 ~ 2.2049in.)
b	B	56.006 ~ 56.012mm (2.2049 ~ 2.2052in.)
c	C	56.012 ~ 56.018mm (2.2052 ~ 2.2054in.)

Crankshaft Journal Mark Location Discrimination Of Crankshaft

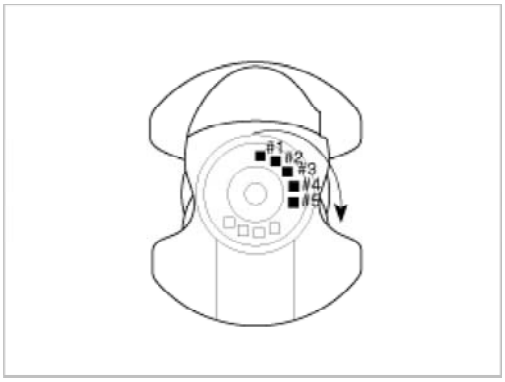

NOTE

Conform to read stamping order as shown arrow direction from #1.

Discrimination Of Crankshaft

Class	Mark	Outside Diameter Of Journal
I	1	51.954 ~ 51.960mm (2.0454 ~ 2.0456in.)
II	2	51.948 ~ 51.954mm (2.0452 ~ 2.0454.)
III	3	51.942 ~ 51.948mm (2.0449 ~ 2.0452in.)

Place Of Identification Mark (Crankshaft Bearing) Discrimination Of Crankshaft Bearing

mcx30.com

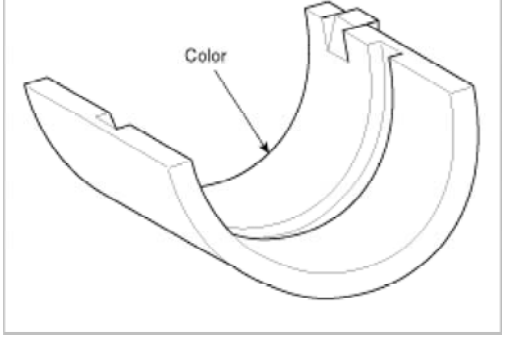

Discrimination Of Crankshaft Bearing

Class	Mark	Thickness Of Bearing
AA	Blue	2.026 ~ 2.029mm (0.0797 ~ 0.0798in.)
A	Black	2.023 ~ 2.026mm (0.0796 ~ 0.0797in.)
B	None	2.020 ~ 2.023mm (0.0795 ~ 0.0796in.)
C	Green	2.017 ~ 2.020mm (0.0794 ~ 0.795in.)
D	Yellow	2.014 ~ 2.017mm (0.0793 ~ 0.0794in.)

Selection

Crankshaft Identification Mark	Crankshaft Bore Identification Mark	Assembling Classification Of Bearing
I (1)	a (A)	D (Yellow)
	b (B)	C (Green)
	c (C)	B (None)
II (2)	a (A)	C (Green)
	b (B)	B (None)
	c (C)	A (Black)
III (3)	a (A)	B (None)
	b (B)	A (Black)
	c (C)	AA (Blue)

4. Check crankshaft end play.
   Using a dial indicator, measure the thrust clearance while prying the crankshaft back and forth with a screwdriver.

Standard end play
0.07 ~ 0.25mm (0.0027 ~ 0.0098in.)
Limit : 0.30mm (0.0118in.)

mcx30.com

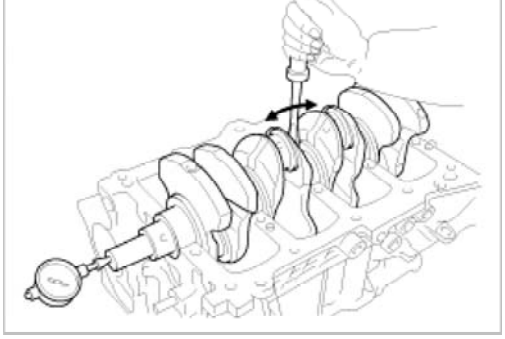

If the end play is greater than maximum, replace the thrust bearings as a set.

Thrust bearing thickness
1.925 ~ 1.965mm(0.0758 ~ 0.07736in.)

5. Inspect main journals and crank pins
   Using a micrometer, measure the diameter of each main journal and crank pin.

Main journal diameter : 51.942 ~ 51.960mm (2.0449 ~ 2.0456in.)
Crank pin diameter : 47.954 ~ 47.972mm (1.8879 ~ 1.8886in.)

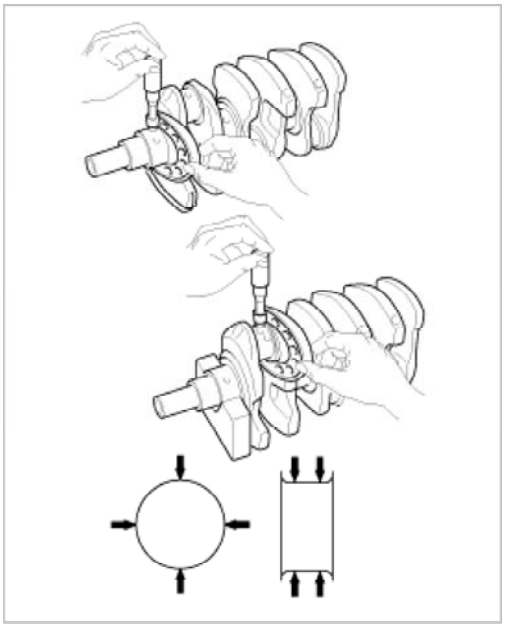

Cylinder Block

1. Remove gasket material.
   Using a gasket scraper, remove all the gasket material from the top surface of the cylinder block.
2. Clean cylinder block
   Using a soft brush and solvent, thoroughly clean the cylinder block.
3. Inspect top surface of cylinder block for flatness.
   Using a precision straight edge and feeler gauge, measure the surface contacting the cylinder head gasket for warpage.

Flatness of cylinder block gasket surface
Standard : Less than 0.05mm(0.0020 in.)

mcx30.com

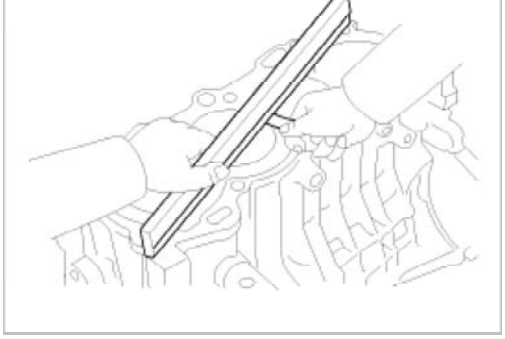

4. Inspect cylinder bore diameter
   Visually check the cylinder for vertical scratchs.
   If deep scratches are present, replace the cylinder block.

5. Inspect cylinder bore diameter
   Using a cylinder bore gauge, measure the cylinder bore diameter at position in the thrust and axial directions.

Standard diameter
[2.4] : 88.00 ~ 88.03mm (3.4645 ~ 3.4657in.)
[2.0] : 86.00 ~ 86.03mm (3.3858 ~ 3.3870in.)

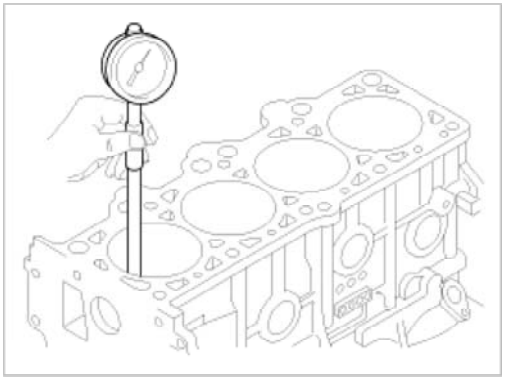

NOTE

Measure position(from the bottom of the cylinder block)
: 110.7mm(4.3582in.)/160mm(6.2992in.)/210mm(8.2677in.)

6. Check the cylinder bore size code on the cylinder block.

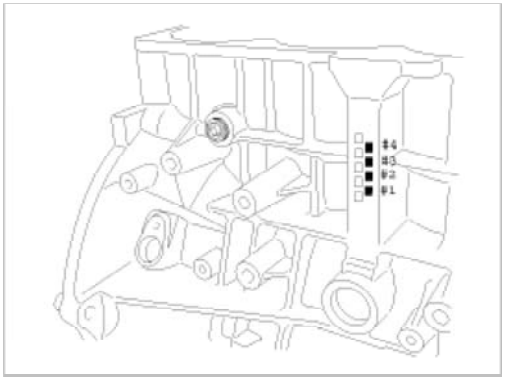

Cylinder Bore Inner Diameter

Size Code	2.0	2.4
A	86.00 ~ 86.01mm (3.3858~ 3.3862in.)	88.00 ~ 88.01mm (3.4645~ 3.4649in.)
B	86.01 ~ 86.02mm (3.3862~ 3.3866in.)	88.01 ~ 88.02mm (3.4649~ 3.4653in.)

mcx30.com

C	(3.3866~ 3.3870in.)	(3.4653~ 3.4657in.)

7. Check the piston size code on the piston top face.

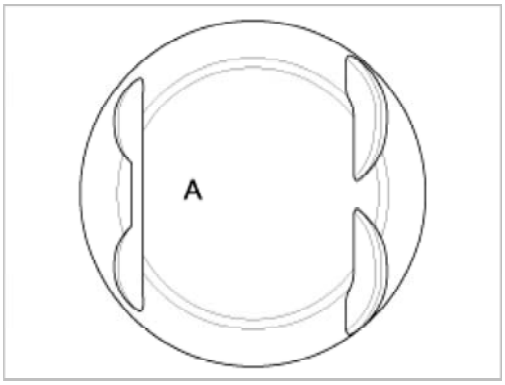

> NOTE
>
> Stamp the grade mark of basic diameter with rubber stamp.

Piston Outer Diameter

Size Code	2.0	2.4
A	85.975 ~ 85.985mm (3.3848~ 3.3852in.)	87.975 ~ 87.985mm (3.4635~ 3.4639in.)
B	85.985 ~85.995mm (3.3852~ 3.3856in.)	87.985 ~ 87.995mm (3.4639~ 3.4643in.)
C	85.995 ~ 86.005mm (3.3856~ 3.3860in.)	87.995 ~88.005mm (3.4643~ 3.4647in.)

8. Select the piston related to cylinder bore class.

Clearance : 0.015 ~ 0.035mm (0.00059 ~ 0.00137in.)

Piston And Rings

1. Clean piston
   (1) Using a gasket scraper, remove the carbon from the piston top.
   (2) Using a groove cleaning tool or broken ring, clean the piston ring grooves.
   (3) Using solvent and a brush, thoroughly clean the piston.

> NOTE
>
> Do not use a wire brush.

2. The standard measurement of the piston outside diameter is taken 34.5 mm (1.35 in.) from the top land of the piston.

Standard diameter
[2.4] : 87.975 ~ 88.005mm (3.4635 ~ 3.4647in.)
[2.0] : 85.975 ~ 86.005mm (3.3848 ~ 3.3860in.)

mcx30.com

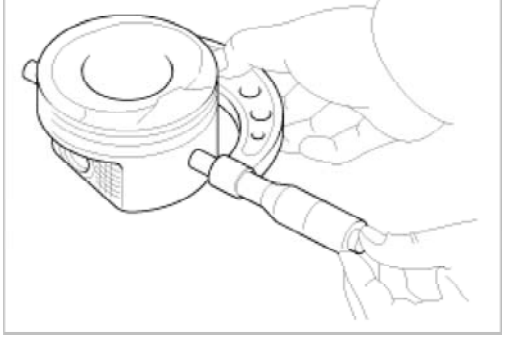

3. Calculate the difference between the cylinder bore diameter and the piston diameter.

Piston-to-cylinder clearance
0.015 ~ 0.035mm(0.00059 ~ 0.00137in.)

4. Inspect the piston ring side clearance.
   Using a feeler gauge, measure the clearance between new piston ring and the wall of the ring groove.

Piston ring side clearance
Standard
No.1 : 0.05 ~ 0.08mm (0.0019 ~ 0.0031in.)
No.2 : 0.04 ~ 0.08mm (0.0015 ~ 0.0031in.)
Oil ring : 0.06 ~ 0.15mm (0.0023 ~ 0.0059in.)
Limit
No.1 : 0.1mm (0.004in.)
No.2 : 0.1mm (0.004in.)
Oil ring : 0.2mm (0.008in.)

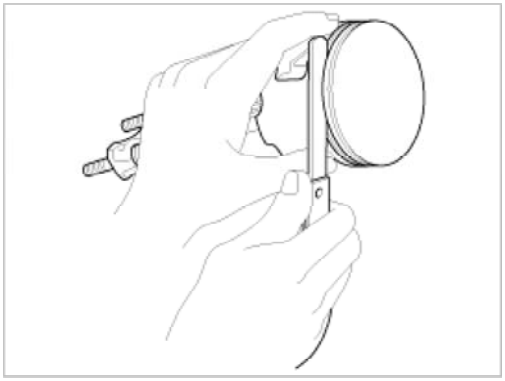

If the clearance is greater than maximum, replace the piston.

5. Inspect piston ring end gap.
   To measure the piston ring end gap, insert a piston ring into the cylinder bore. Position the ring at right angles to the cylinder wall by gently pressing it down with a piston. Measure the gap with a feeler gauge. If the gap exceeds the service limit, replace the piston ring. If the gap is too large, recheck the cylinder bore diameter against the wear limits, If the bore is over the service limit, the cylinder block must be rebored.

Piston ring end gap
Standard
No.1 : 0.15 ~ 0.30mm (0.0059 ~ 0.0118in.)
No.2 : 0.37 ~ 0.52m (0.0145 ~ 0.0204in.)
Oil ring : 0.20 ~ 0.70mm (0.0079 ~ 0.0275in.)
Limit
No.1 : 0.6mm (0.0236in.)
No.2 : 0.7mm (0.0275in.)
Oil ring : 0.8mm (0.0315in.)

mcx30.com

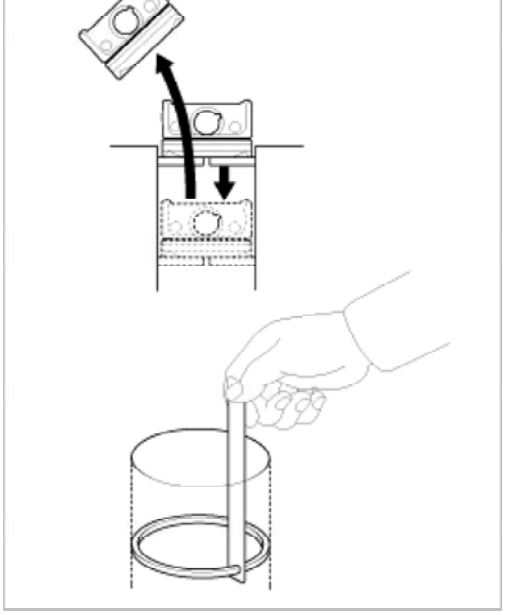

Piston Pins

1. Measure the diameter of the piston pin.

Piston pin diameter
21.001 ~ 21.006mm (0.8268 ~ 0.8270in.)

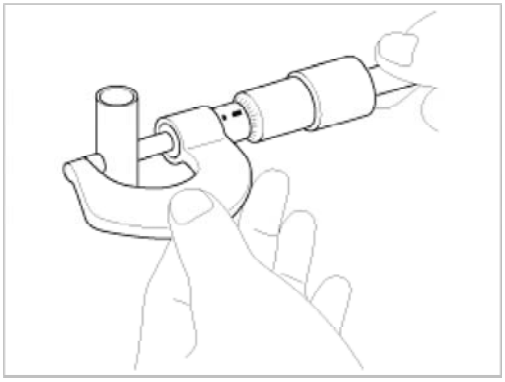

2. Measure the piston pin-to-piston clearance.

Piston pin-to-piston clearance
0.013 ~ 0.023mm (0.0005 ~ 0.0009in.)

3. Check the difference between the piston pin diameter and the connecting rod small end diameter.

Piston pin-to-connecting rod interference
0.016 ~ 0.032mm (0.00063 ~ 0.00126in.)

Reassembly

NOTE

- Thoroughly clean all parts to assembled.
- Before installing the parts, apply fresh engine oil to all sliding and rotating surfaces.
- Replace all gaskets, O-rings and oil seals with new parts.

1. Assemble piston and connecting rod.

mcx30.com

CAUTION

- Take care that piston pin is not to be damaged during pressing process.
- When replace the piston pin, check the piston pin outer diameter and connecting rod small end inner diameter as below.

Piston pin outer DIA. :
21.001 ~ 21.006mm (0.8268 ~ 0.8270in)
Connecting rod small end inner DIA. :
20.974 ~ 20.985mm (0.8257 ~ 0.8261in)
Interference:
-0.032 ~ -0.016 mm (-0.0013 ~ -0.0006 in.)

(2) Use a hydraulic press for installation.

(3) The piston front mark and the connecting rod front mark must face the timing belt side of the engine.

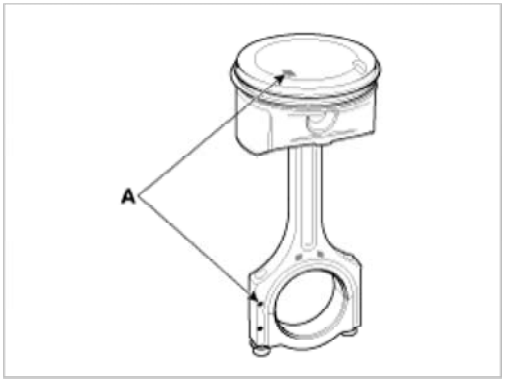

2. Install piston rings.
   (1) Install the oil ring spacer and 2 side rails by hand.
   (2) Using a piston ring expander, install the 2 compression rings with the code mark facing upward.
   (3) Position the piston rings so that the ring ends are as shown.

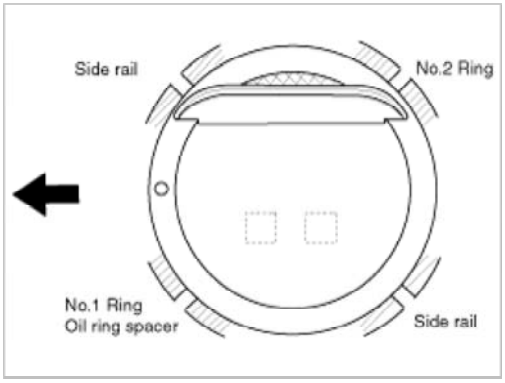

3. Install connecting rod bearings.
   (1) Align the bearing claw with the groove of the connecting rod or connecting rod cap.
   (2) Install the bearings(A) in the connecting rod and connecting rod cap(B).

mcx30.com

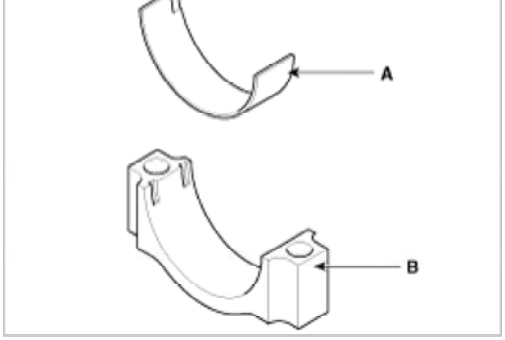

4. Install main bearings.

> **NOTE**
>
> Upper bearings have an oil groove of oil holes; Lower bearings do not.

(1) Align the bearing claw with the claw groove of the cylinder block, push in the 5 upper bearings(A).

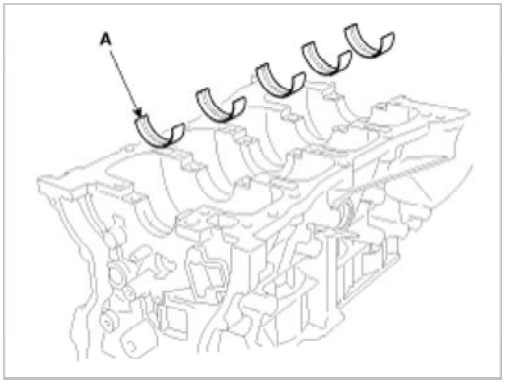

(2) Align the bearing claw with the claw groove of the main bearing cap, and push in the 5 lower bearings.

5. Install thrust bearings.
Install the 2 thrust bearings(A) under the No.3 journal position of the cylinder block with the oil grooves facing outward.

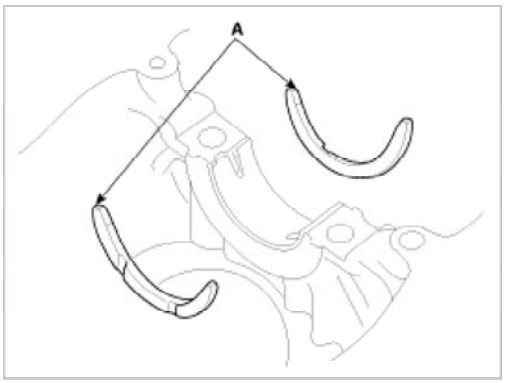

6. Place crankshaft(A) on the cylinder block.

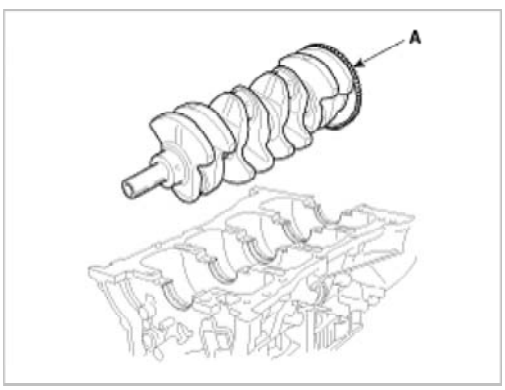

mcx30.com

8. Install main bearing cap bolts.

> **CAUTION**
>
> Always use new main bearing cap bolts.

> **NOTE**
>
> - The main bearing cap bolts are tightened in 2 progressive steps.
> - If any of the bearing cap bolts in broken or deformed, replace it.

(1) Apply a light coat of engine oil on the threads and under the bearing cap bolts.

(2) Install and uniformly tighten the 10 bearing cap bolts(A), in several passes, in the sequence shown.

Tightening torque
14.7Nm (1.5kgf.m, 10.8lb-ft) + 27.5~31.4Nm (2.8~3.2kgf.m, 20.3~23.1lb-ft) + 120~125°

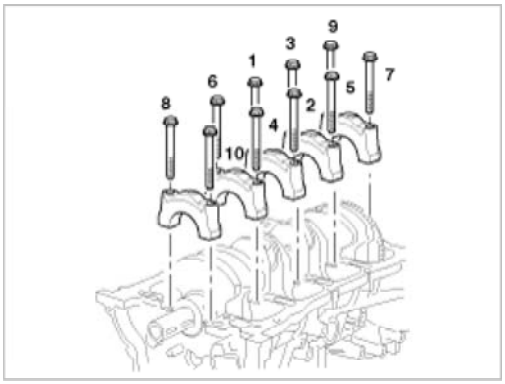

(3) Check that the crankshaft turns smoothly.

9. Check crankshaft end play.

10. Install piston and connecting rod assemblies.

> **NOTE**
>
> Before installing the pistons, apply a coat of engine oil to the ring grooves and cylinder bores.

(1) Remove the connecting rod caps, and slip short sections of rubber hose over the threaded ends of the connecting rod bolts.

(2) Install the ring compressor, check that the bearing is securely in place, then position the piston in the cylinder, and tap it in using the wooden handle of a hammer.

(3) Stop after the ring compressor pops free, and check the connecting rod-to-check journal alignment before pushing the piston into place.

(4) Apply engine oil to the bolt threads. Install the rod caps with bearings, and torque the bolts.

Tightening torque
17.7~21.6Nm (1.8~2.2kgf.m, 13.0~15.9lb-ft) + 88~92°

> **CAUTION**
>
> Always use new connecting rod cap bolts.

> **NOTE**
>
> Maintain downward force on the ring compressor to prevent the rings from expanding before entering the cylinder bore.

mcx30.com

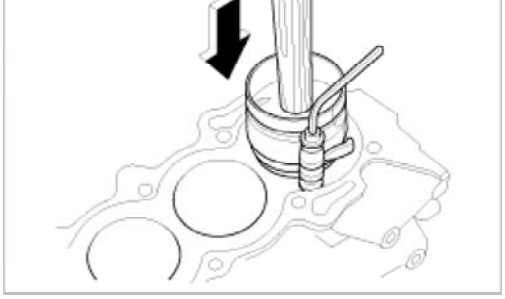

11. Apply liquid gasket to the mating surface of cylinder block and ladder frame.

NOTE

- Be assembling ladder frame, the liquid sealant Loctite 5900 or THREEBOND 1217H should be applied ladder frame.
- The part must be assembled within 5 minutes after sealant was applied.
- Apply sealant to the inner threads of the bolt holes.

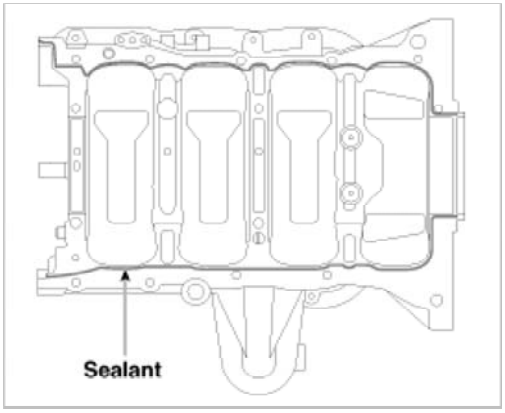

12. Install ladder frame(A) with 10 bolts in several passes in sequence shown.

Tightening torque
Step 1 : 8.8 ~ 9.8N.m (0.9 ~ 1.0kgf.m, 6.5 ~ 7.2lb-ft)
Step 2 : 17.7 ~20.6N.m (1.8 ~ 2.1kgf.m, 3.0 ~ 15.2lb-ft)
Step 3 : 27.5 ~ 31.4N.m (2.8 ~ 3.2kgf.m, 20.3 ~ 23.1lb-ft)

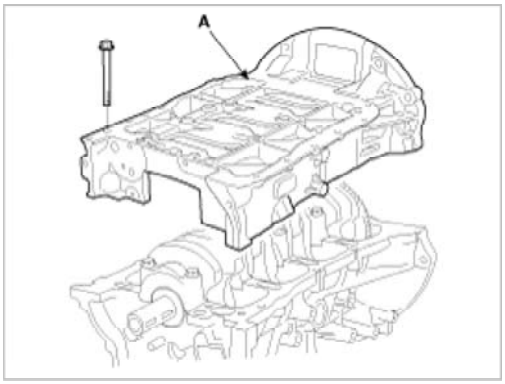

mcx30.com

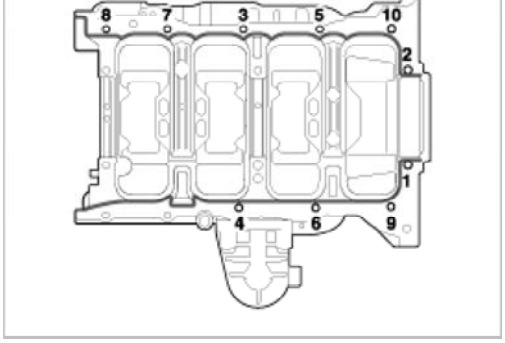

13. Install rear oil seal.
    (1) Apply engine oil to a new oil seal lip.
    (2) Using SST(09231-H1100, 09214-3K100) and a hammer, tap in the oil seal until its surface is flush with the rear oil seal retainer edge.
14. Install balance shaft module (oil pump).
15. Install water pump.
16. Install CKP sensor(A) and sensor cover.

Tightening torque
9.8 ~ 11.8N.m (1.0 ~ 1.2kgf.m, 7.2 ~ 8.7lb-ft)

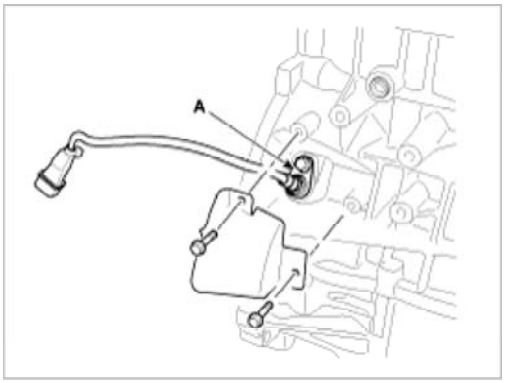

17. Install oil pressure sensor.
    (1) Apply adhesive to 2 or 3 threads.
    Adhesive : MS 721-39(B) or equivalent.
    (2) Install the oil pressure sensor (A).

Tightening torque
7.8 ~ 11.8N.m (0.8 ~ 1.2kgf.m, 5.8 ~ 8.7lb-ft)

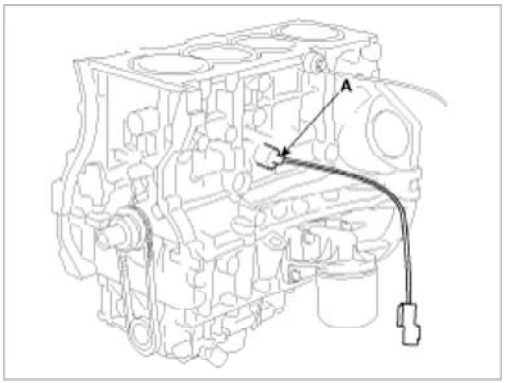

18. Install knock sensor(A).

Tightening torque

mcx30.com

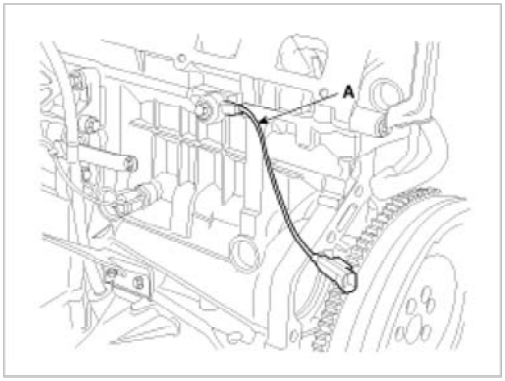

19. Install oil level gauge assembly.
    (1) Install a new O-ring on the oil dip stick.
    (2) Apply engine oil on the O-ring.
    (3) Install the oil dip stick (A) with the bolt.

Tightening torque
7.8 ~ 11.8N.m (0.8 ~ 1.2kgf.m, 5.8 ~ 8.7lb-ft)

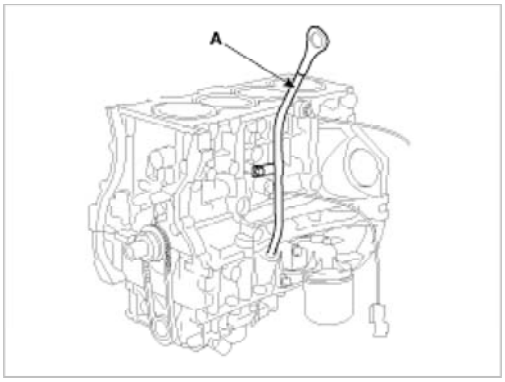

20. Install the cylinder head. (Refer to Cylinder head assembly in this group)
21. Install the timing chain. (Refer to Timing system in this group)
22. Install the oil pan.
    (1) Using a razor blade and gasket scraper, remove all the old gasket material from the gasket surfaces.

NOTE

Check that the mating surfaces are clean and dry before applying liquid gasket.

    (2) Apply liquid gasket as an even bead, centered between the edges of the mating surface.
    Use liquid gasket LOCTITE5900H or THREEBOND 1217H or equivalent(MS721-40).

Bead width : 3.0mm (0.12in)

mcx30.com

NOTE

- To prevent leakage of oil, apply liquid gasket to the inner threads of the bolt holes.
- Do not install the parts if five minutes or more have elapsed since applying the liquid gasket. Instead, reapply liquid gasket after removing the residue.
- After assembly, wait at least 30 minutes before filling the engine with oil.

(3) Install the oil pan(A).
Uniformly tighten the bolts in several passes.

Tightening torque
M9(B):30.4 ~ 34.3N.m (3.1 ~ 3.5kgf.m, 22.4 ~ 25.3lb-ft)
M6(C):9.8 ~ 11.8N.m (1.0 ~ 1.2kgf.m, 7.2 ~ 8.7lb-ft)

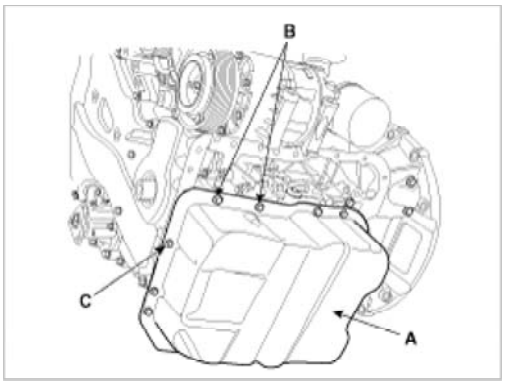

23. Remove engine stand.
24. A/T : Install drive plate(A).

Tightening torque
117.7 ~ 127.5N.m (12 ~ 13kgf.m, 86.8 ~ 94.0lb-ft)

M/T : Install flywheel(B).

Tightening torque
117.7 ~ 127.5N.m (12 ~ 13kgf.m, 86.8 ~ 94.0lb-ft)

mcx30.com

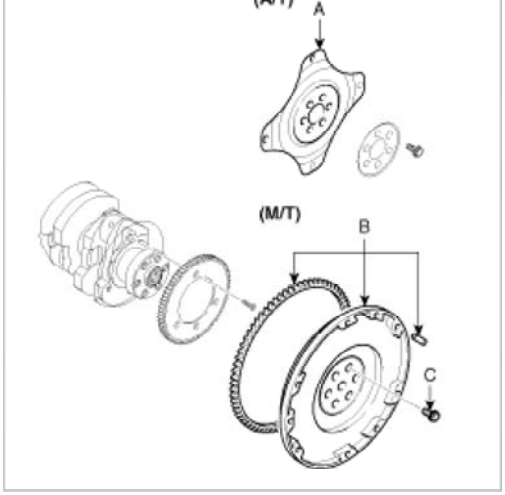

NOTE

- Always use new flywheel(drive plate) bolts(C).
- Apply sealant to the screw part(8mm from the end of the bolt) when using new flywheel bolts.

Sealant : Three bond 2403, Loctite 200 or 204

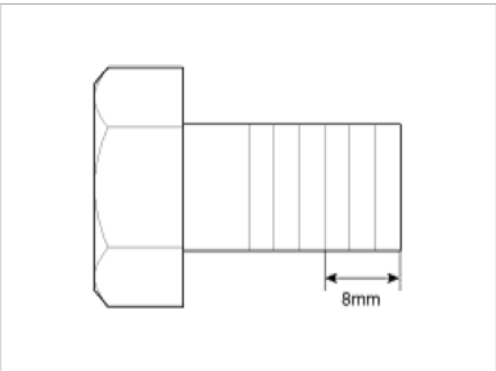

- Install and uniformly tighten the 7 bolts, in several passes.

Engine Mechanical System > Cooling System > Coolant > Repair procedures

Replacement And Air Bleeding

WARNING

Never remove the radiator cap when the engine is hot. Serious scalding could be caused by hot fluid under high pressure escaping from the radiator.

CAUTION

When pouring engine coolant, be sure to shut the relay box lid and not to let coolant spill on the electrical parts or the paint. If any coolant spills, rinse it off immediately.

1. Make sure the engine and radiator are cool to the touch.
2. Remove radiator cap.
3. Loosen the drain plug, and drain the coolant
4. Tighten the radiator drain plug securely.
5. After draining engine coolant in the reservoir tank, clean the tank.
6. Fill the radiator with water through the radiator cap and tighten the cap.

mcx30.com

NOTE

Pressure can blow water back out the radiator cap-pour water slowly while intermittently squeezing the radiator hoses.

7. After warming up the engine until the cooling fan operates several times, accelerate it at idle.
8. Wait until the engine is cool.
9. Repeat the step 1 to 8 until the drained water is clean.
10. Fill fluid mixture with coolant and water(5 : 5) (Tropical region – 4:6) slowly through the radiator cap. Push the upper/lower hoses of the radiator so as bleed air easily.

NOTE

- Use only genuine antifreeze/coolant.
- For best corrosion protection, the coolant concentration must be maintained year-round at 35% minimum. Coolant concentrations less than 35% may not provide sufficient protection against corrosion or freezing.
- Coolant concentrations greater then 60% will impair cooling efficiency and are not recommended.

CAUTION

- Do not mix different brands of antifreeze/coolants.
- Do not use additional rust inhibitors or antirust products; they may not be compatible with the coolant.

11. Start the engine and run coolant circulates.
    When the cooling fan operates and coolant circulates, refill coolant through the radiator cap.
12. Repeat 11 until the cooling fan 3 ~ 5times and bleed air sufficiently out of the cooling system.
13. Install the radiator cap and fill the reservoir tank to the "MAX" line with coolant.
14. Run the vehicle under idle until the cooling fan operates 2 ~ 3 times.
15. Stop the engine and wait coolant to cool.
16. Repeat step.10 to step.15 until the coolant level doesn't fall any more, bleed air out of the cooling system

NOTE

As it is to bleed air out to the cooling system and refill coolant when coolant gets cool completely, recheck the coolant level in the reservoir tank for 2 ~ 3 days after replacing coolant.

Coolant capacity : 6.8L (7.2US qt, 5.9Imp qt)

Engine Mechanical System > Cooling System > Radiator > Components and Components Location

Components

mcx30.com

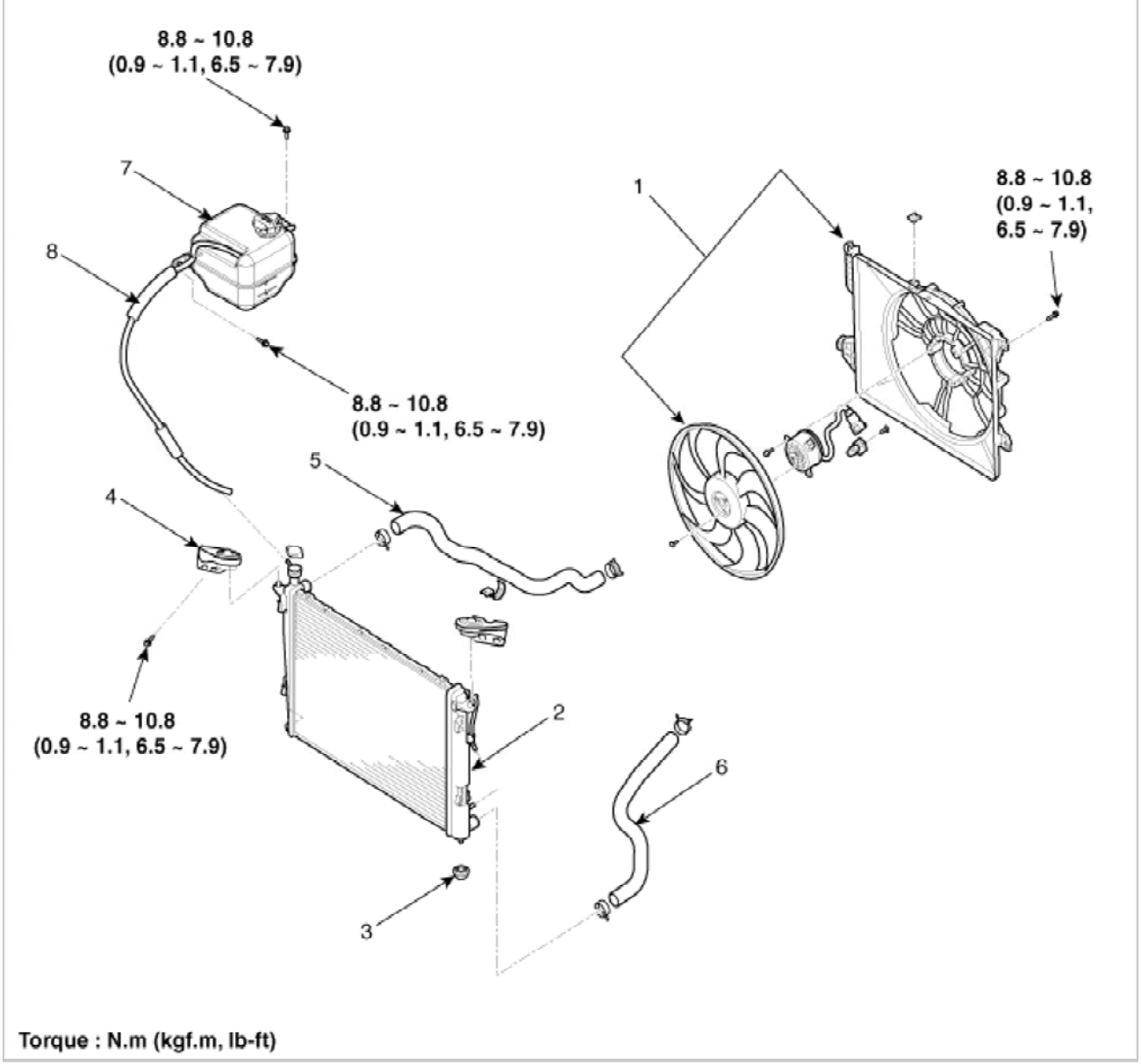

1. Cooling fan assembly	5. Radiator upper hose
2. Radiator	6. Radiator lower hose
3. Mounting insulator	7. Reservoir tank
4. Radiator mounting bracket	8. Over flow hose

Engine Mechanical System > Cooling System > Radiator > Repair procedures

Removal and Installation

1. 1. Disconnect the battery negative terminal.
2. Remove the air cleaner assembly. (Refer to Intake and exhaust system in this group)
3. 3. Remove the under cover (A).

Tightening torque:
19.6 ~ 24.5 N.m (2.0 ~ 2.5 kgf.m, 14.5 ~ 18.1 lb-ft)

mcx30.com

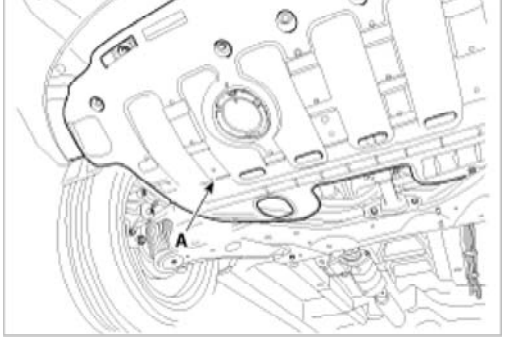

4. Loosen the drain plug (A), and drain the coolant.
   Remove the radiator cap to speed draining.

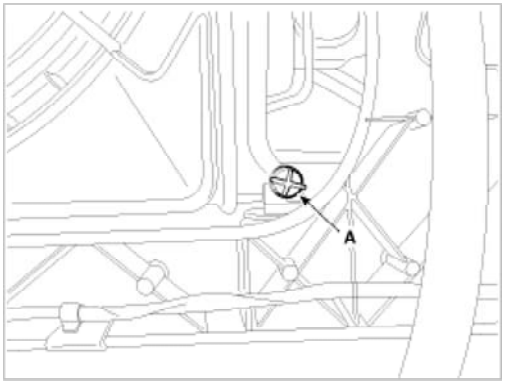

> WARNING
>
> Never remove the radiator cap when the engine is hot. Serious scalding could be caused by hot fluid under high pressure escaping from the radiator.

5. Remove the radiator upper hose (A) and lower hose (B).

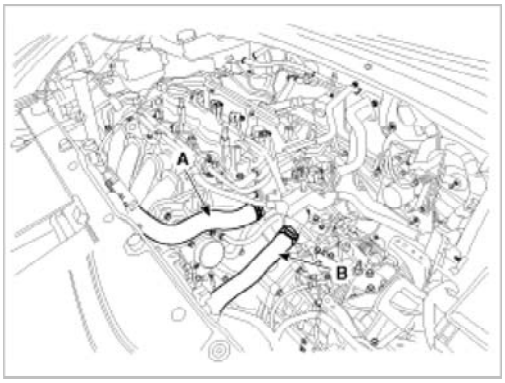

6. Disconnect the ATF cooler hoses (A/T only). (Refer to AT group)
7. Disconnect the fan motor connector (A) and then remove the cooling fan assembly.

Tightening torque:
8.8 ~ 10.8 N.m (0.9 ~ 1.1 kgf.m, 6.5 ~ 7.9 lb-ft)

mcx30.com

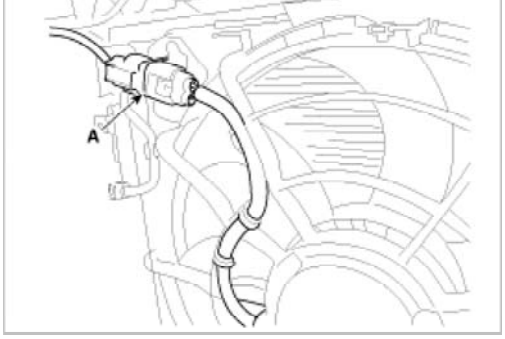

8. Remove the front bumper. (Refer to BD group)
9. Disconnect the over flow hose (A) from the radiator.

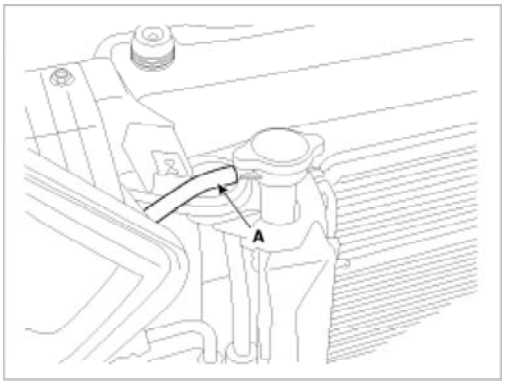

10. Remove the cover (A) and the air guard (B) and then separate the condenser from the radiator.

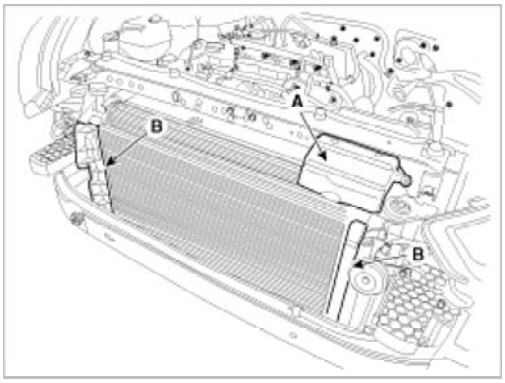

11. Remove the radiator mounting bracket (A) and then pull the radiator upper from vehicle.

Tightening torque:
8.8 ~ 10.8 N.m (0.9 ~ 1.1 kgf.m, 6.5 ~ 7.9 lb-ft)

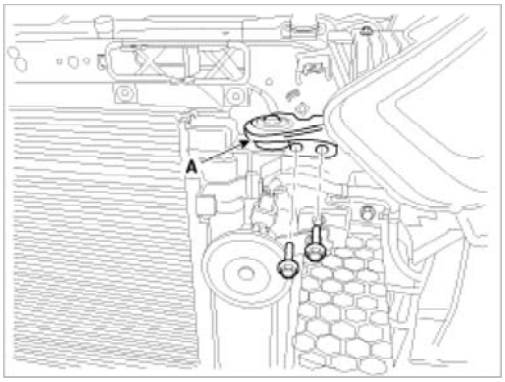

mcx30.com

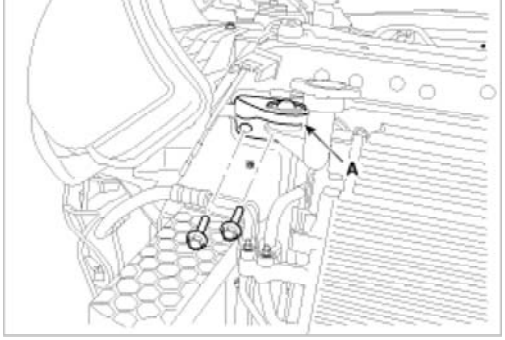

12. Installation is in the reverse order of removal.
13. Fill the radiator with coolant and check for leaks.

> **NOTE**
>
> • Bleed air from the cooling system.
> - Start engine and let it run until it warms up. (Until the radiator fan operates 3 or 4 times.)
> - Turn off engine and let it cool down. Check the coolant level and add coolant if needed. This will allow trapped air to be removed from the cooling system.
> - Put the radiator cap on tightly, then run engine again and check for leaks.

Inspection

Radiator Cap Testing

1. Remove the radiator cap, wet its seal with engine coolant, then install it to pressure tester.

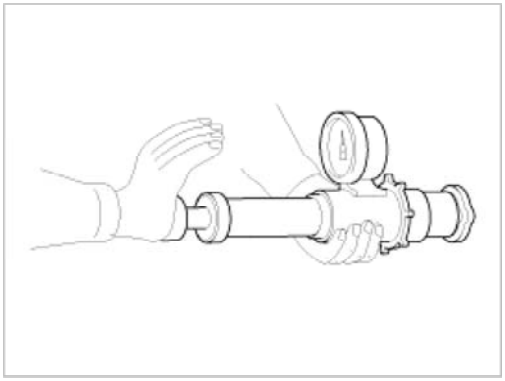

2. Apply a pressure of 93 ~ 123kPa (0.95 ~ 1.25kgf/cm², 14 ~ 19psi).
3. Check for a drop in pressure.
4. If the pressure drops, replace the cap.

Radiator Leakage Test

1. Wait until engine is cool, then carefully remove the radiator cap and fill the radiator with engine coolant, then install a pressure tester on it.

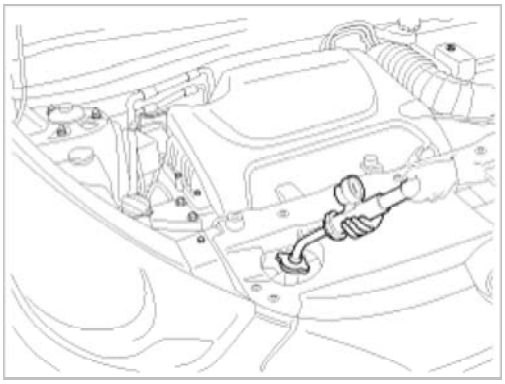

mcx30.com

3. Inspect for engine coolant leaks and a drop in pressure.
4. If the pressure drops, check hoses, the radiator and the water pump for leakage. If there is no leakage, inspect the heater core, the cylinder block and the cylinder head.
5. Remove the tester and reinstall the radiator cap.

> **NOTE**
>
> Check for engine oil in coolant and/or coolant in engine oil.

Engine Mechanical System > Cooling System > Water pump > Components and Components Location

Components

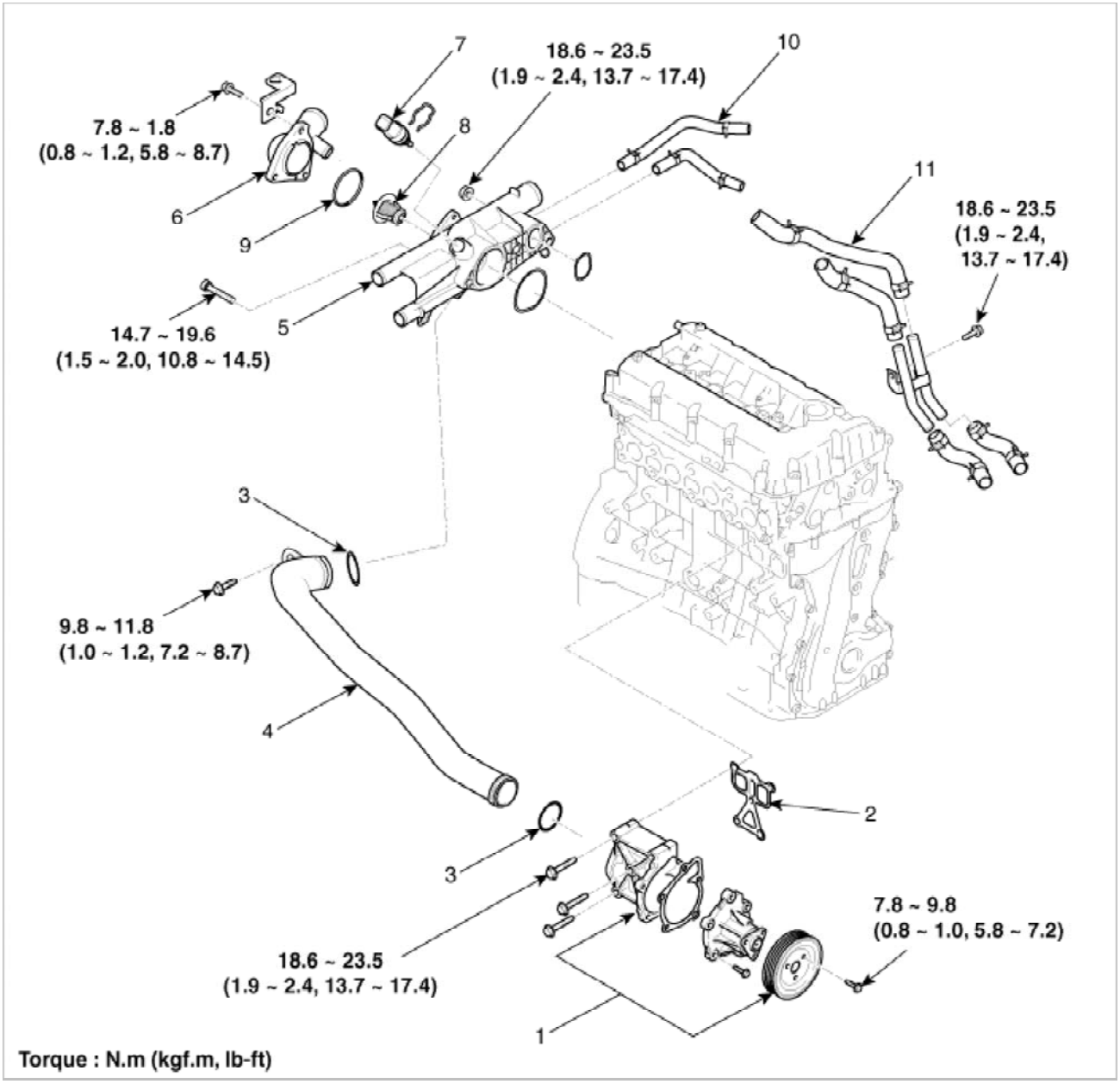

1. Water pump	7. Engine Coolant temperature sensor
2. Water Pump gasket	8. Thermostat
3. O-ring	9. Thermostat gasket
4. Water inlet pipe	10. Throttle body coolant hose
5. Water temperature control assembly	11. Oil cooler pipe & hose assembly

mcx30.com

Engine Mechanical System > Cooling System > Water pump > Repair procedures

Removal and Installation

1. Loosen the drain plug (A), and drain the coolant.
   Remove the radiator cap to speed draining.

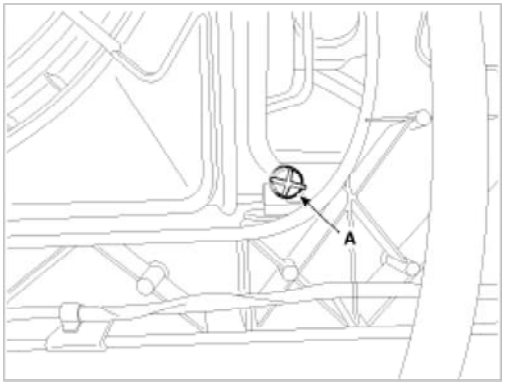

> **WARNING**
>
> Never remove the radiator cap when the engine is hot. Serious scalding could be caused by hot fluid under high pressure escaping from the radiator.

2. Remove the drive belt (A).

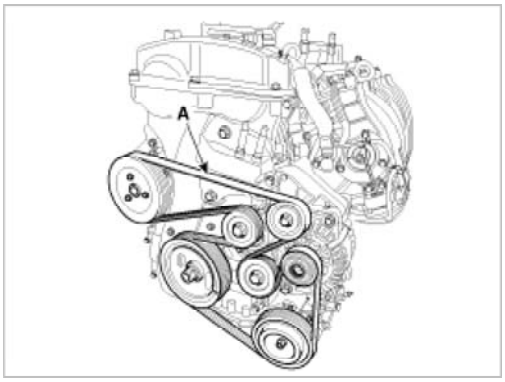

3. Remove the exhaust manifold heat protector (A).

Tightening torque:
7.8 ~ 11.8 N.m (0.8 ~ 1.2 kgf.m, 5.8 ~ 8.7 lb-ft)

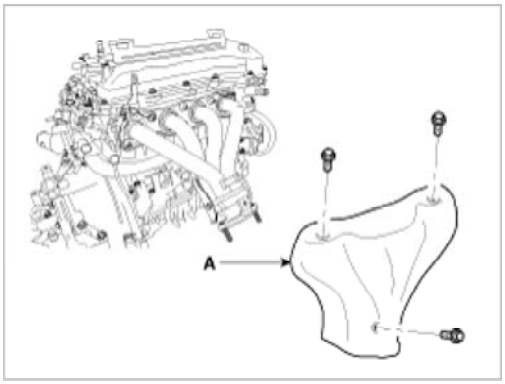

4. Remove the water inlet pipe bolt (A), and then remove the water pump (B) and the gasket.

Tightening torque:

mcx30.com

B: 18.6 ~ 23.5 N.m (1.9 ~ 2.4 kgf.m, 13.7 ~ 17.4 lb-ft)

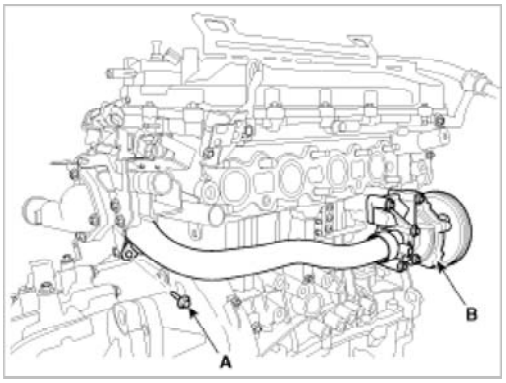

5. Installation is in the reverse order of removal.
6. Fill the radiator with coolant and check for leaks.

> NOTE
>
> • Bleed air from the cooling system.
> - Start engine and let it run until it warms up. (Until the radiator fan operates 3 or 4 times.)
> - Turn off engine and let it cool down. Check the coolant level and add coolant if needed. This will allow trapped air to be removed from the cooling system.
> - Put the radiator cap on tightly, then run engine again and check for leaks.

Inspection

1. Check each part for cracks, damage or wear, and replace the coolant pump assembly if necessary.
2. Check the bearing for damage, abnormal noise and sluggish rotation, and replace the coolant pump assembly if necessary.
3. Check for coolant leakage. If coolant leaks from hole, the seal is defective. Replace the coolant pump assembly.

> NOTE
>
> A small amount of "weeping" from the bleed hole is normal.

Engine Mechanical System > Cooling System > Water pump > Troubleshooting

Troubleshooting

Symptoms		Possible Causes		Remedy
Coolant leakage	• From the bleed hole of the water pump	Naked eye observation	• Check leaks after about ten-minute warming up.	• If coolant still leaks, replace a water pump.
				• If leakage stops, reuse the water pump (Do not replace the pump with a new one).
	• From gaskets or bolts		• Check the tightening of the water pump mounting bolts.	• Retighten the mounting bolts.
			• Check damage of gaskets or inflow of dust.	• Replace the gasket and clean dust off.
	• From outer surface of water pump		• Check the material or any cracks of the water pump.	• Poor material. If any crack found, replace the water pump.

mcx30.com

	• From mechanical seals • Impeller interference	stethoscope	engine, check noise with a stethoscope.	water pump(do not replace it).
				• If there is any noise from the water pump, remove the drive belt and recheck.
		Inspection after removing a drive belt	• After removing a water pump and a drive belt, check noise again.	• If there is noise, reuse the water pump. Check other drive line parts.
				• If there is no noise, replace the water pump with a new one.
		Inspection after removing a water pump	• After removing a water pump and a drive belt, check noise again.	• If there is any interference between them, replace the water pump with a new one.
Overheating	• Damaged impeller • Loosened impeller	Loosened impeller	• Corrosion of the impeller wing	• Check engine coolant. • Poor coolant quality / Maintenance check
			• Impeller seperation from the shaft	• Replace the water pump.

Engine Mechanical System > Cooling System > Thermostat > Repair procedures

Removal and Installation

NOTE

Removal of the thermostat would have an adverse effect, causing a lowering of cooling efficiency. Do not remove the thermostat, even if the engine tends to overheat.

1. Drain engine coolant so its level is below thermostat.
2. Remove the radiator lower hose (A).

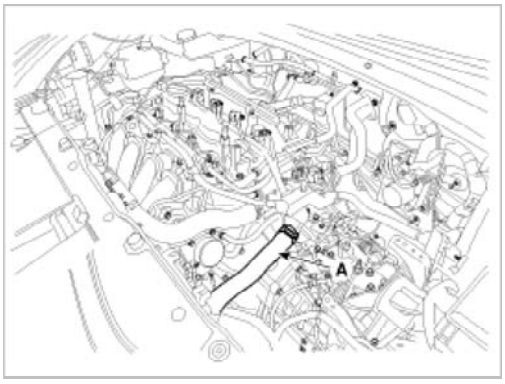

3. Remove water inlet fitting (A), gasket (B) and thermostat (C).

Tightening torque :
7.8 ~ 11.8N.m (0.8 ~ 1.2kgf.m, 5.8 ~ 8.7lb-ft)

mcx30.com

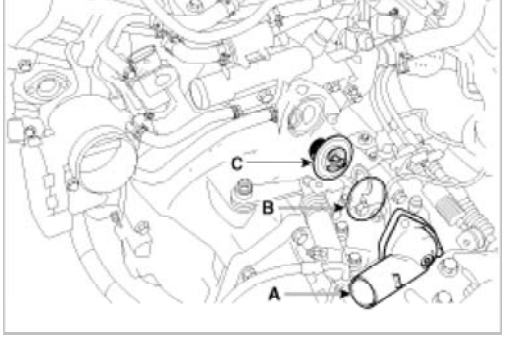

4. Installation is reverse order of removal.

> **NOTE**
>
> Install the thermostat with the jiggle valve upward.

5. Fill the engine coolant.
6. Start the engine and check for leaks.
7. Recheck the coolant level.

Inspection

1. Immerse the thermostat in water and gradually heat the water.

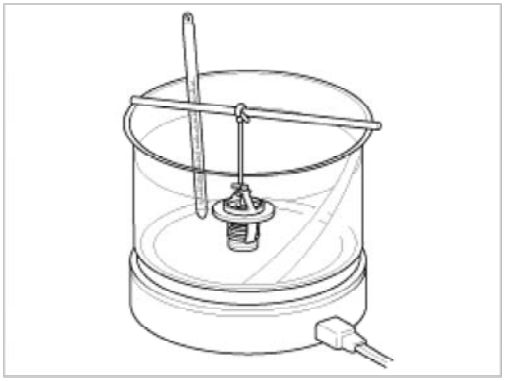

2. Check the valve opening temperature.

Valve opening temperature : 82°C (177°F)
Full opening temperature : 95°C (205°F)

If the valve opening temperature is not as specified, replace the thermostat.

3. Check the valve lift.

Valve lift : 8mm (0.3in.) or more at 95°C (205°F)

If the valve lift is not as specified, replace the thermostat.

Engine Mechanical System > Cooling System > Thermostat > Troubleshooting

Troubleshooting

Symptoms		Possible Causes		Remedy
Coolant leakage	• From the thermostat gasket	Check the mounting bolts	• Check the torque of the mounting bolts	• Retighten the bolts and check leakage again.
		Check the gasket for damage	• Check gasket or seal for damage	• Replace gaskets and reuse the thermostat.

mcx30.com

excessively	performance (cool air blowed-out) • Thermogauge indicates 'LOW'	observation after removing the radiator cap.	leakage.	recheck.
		GDS check & Starting engine	• Check DTCs • Check connection of the fan clutch or the fan motor. ※ If the fan clutch is always connected, there will be a noise at idle.	• Check the engine coolant sensor, wiring and connectors. • Replace the componants.
		Remove the thermostat and inspect	• Check if there are dusts or chips in the thermostat valve. • Check adherence of the thermostat.	• Clean the thermostat valve and reuse the thermostat. • Replace the thermostat, if it doesn't work properly.
Heated excessively	• Engine overheated • Thermogauge indicates 'HI'	Naked eyes observation after removing the radiator cap.	• Insufficient coolant or leakage. ※ Be careful when removing a radiator cap of the overheated vehicle. • Check air in cooling system.	• After refilling coolant, recheck. • Check the cylinder head gaskets for damage and the tightening torque of the mounting bolts.
		GDS check & Starting engine	• Check DTCs • Check the fan motor performance as temperature varies. • Check if the fan clutch slips. • Check the water pump adherence or impeller damaged.	• Check the engine coolant sensor, wiring and connectors. • Check the fan motor, the relay and the connector. • Replace the fan clutch, if it doesn't work properly. • Replace the water pump, if it doesn't work properly.
		Immerse the thermostat in boiling water and inspection.	• After removing the thermostat, check it works properly. ※ Check the thermostat opens at the valve opening temperature.	• Replace the thermostat, if it doesn't work properly.

Engine Mechanical System > Lubrication System > Oil Pump > Components and Components Location

Components

[2.4L Engine only (Balance shaft module type)]

mcx30.com

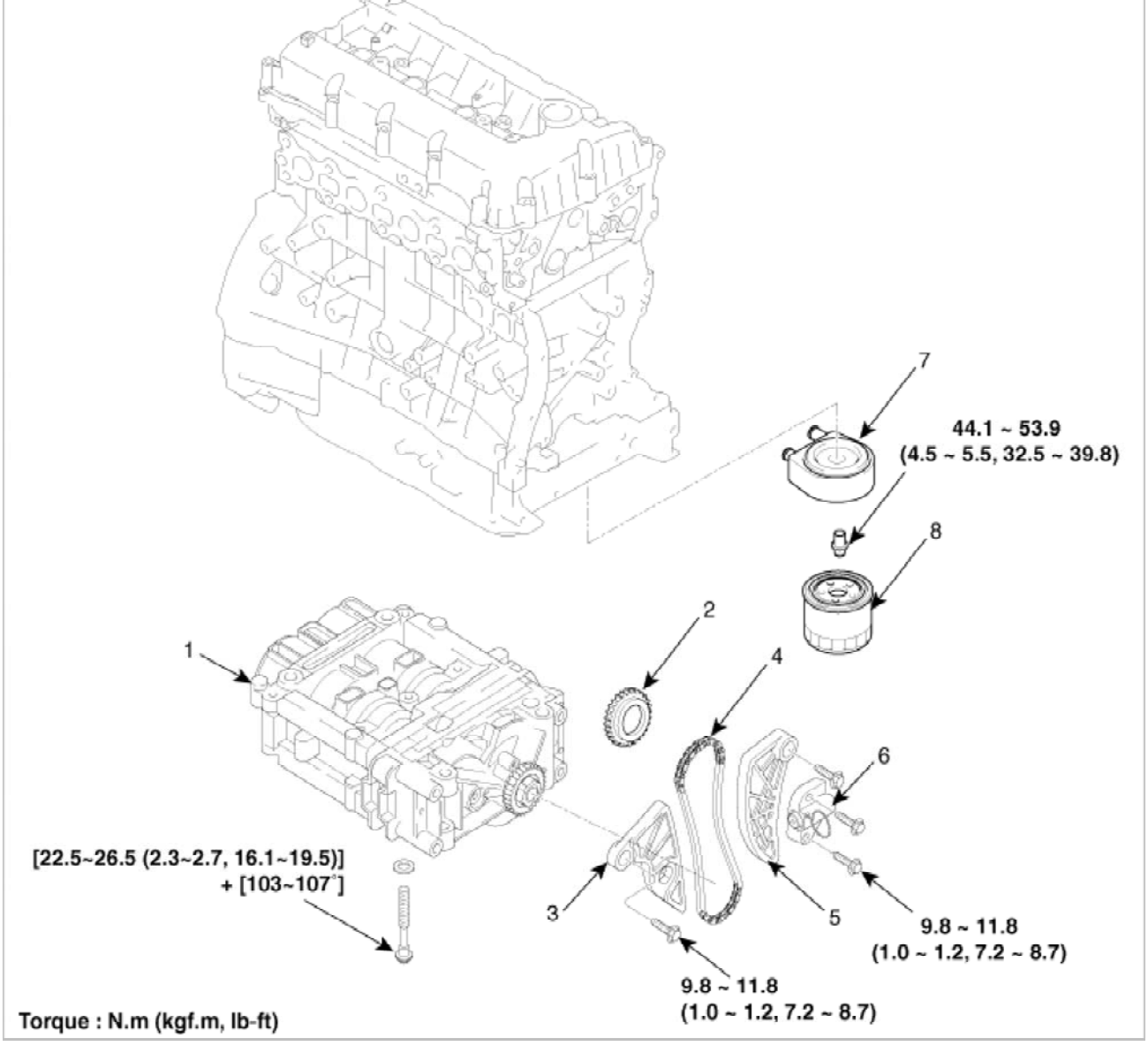

1. Balance shaft & oil pump assembly	5. Balance shaft chain tensioner arm
2. Balance shaft chain sprocket	6. Balance shaft chain tensioner
3. Balance shaft chain guide	7. Oil cooler
4. Balance shaft chain	8. Oil filter

[2.0L Engine only (Oil pump type)]

mcx30.com

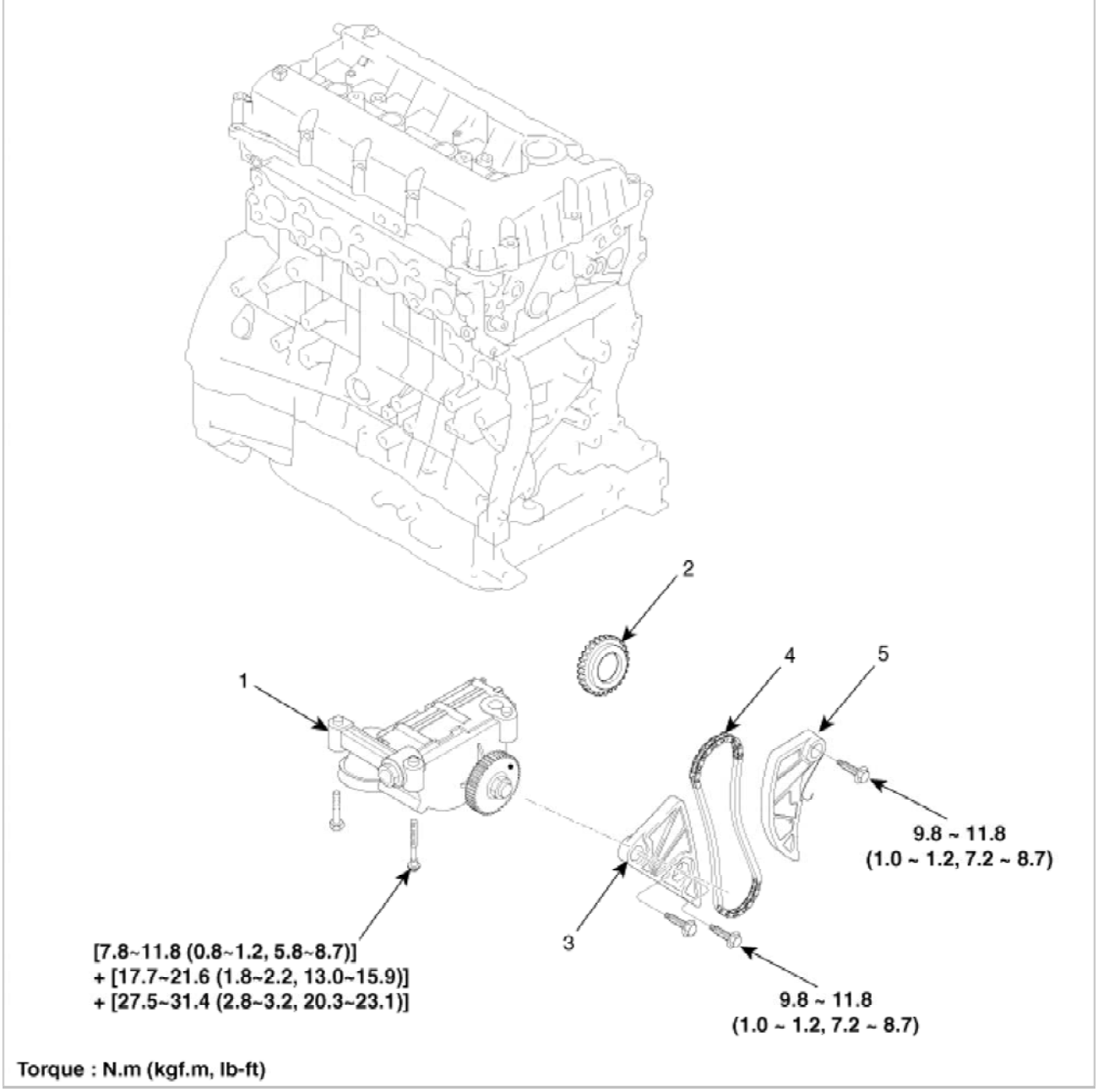

1. Oil pump 2. Oil pump chain sprocket 3. Oil pump chain guide	4. Oil pump chain 5. Oil pump chain mechanical tensioner

Engine Mechanical System > Lubrication System > Oil Pump > Repair procedures

Removal

[2.4L Engine only]

1. Remove the timing chain.
   (Refer to timing system in this group)

NOTE

2. Install a set pin after compressing the balance shaft chain tensioner.
3. Remove the balance shaft chain hydraulic tensioner (A).

mcx30.com

5. Remove the balance shaft chain guide (C).

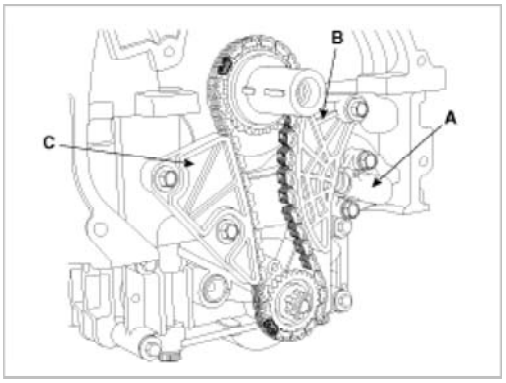

6. Remove the oil pump & balance shaft module (A) and balance shaft chain (B).

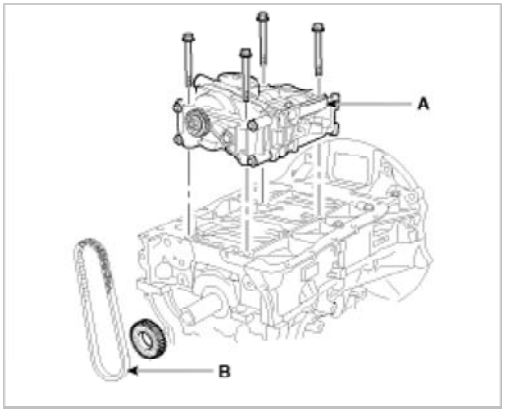

> **CAUTION**
>
> Do not disassemble the oil pump & balance shaft module.

[2.0L Engine only]

1. Remove the timing chain.
   (Refer to timing system in this group)
2. Remove the oil pump chain mechanical tensioner (B).
3. Remove the oil pump chain guide (D).

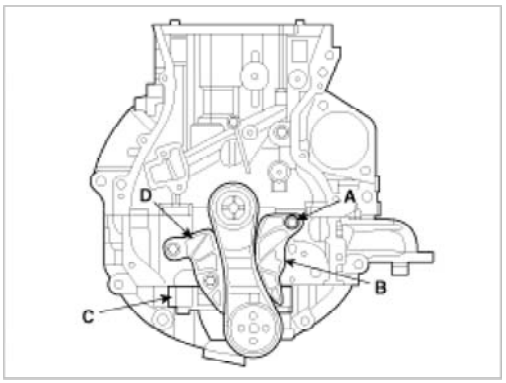

4. Remove the oil pump (A) and oil pump chain.

mcx30.com

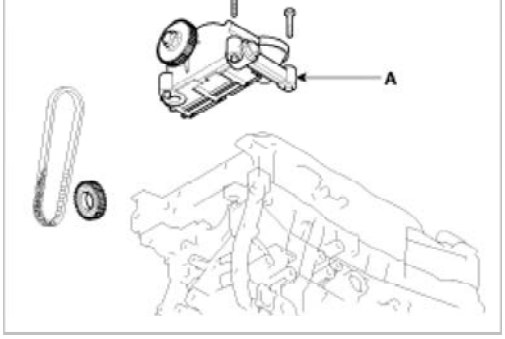

Installation

[2.4L Engine only]

1. The key of crankshaft should be aligned with the mating face of main bearing cap. As a result of this, the piston of No.1 cylinder is placed at the top dead center on compression stroke.
2. Confirm the balance shaft module timing mark.
   Timing marks to be visually aligned with centers of adjacent cast timing notches.

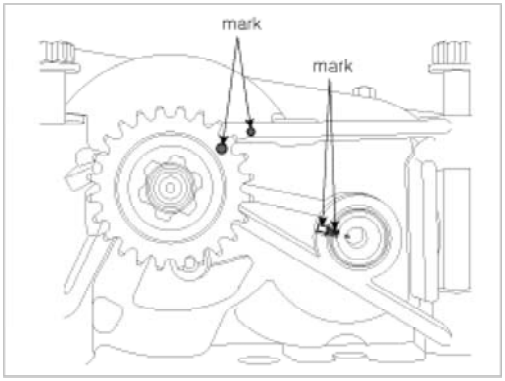

3. Install balance shaft module that the timing mark of balance shaft module sprocket should be matched with the timing mark (color link) of balance shaft chain.

Tightening torque :
22.5~26.5N.m (2.3~2.7kgf.m, 16.1~19.5lb-ft) + (103~107°)

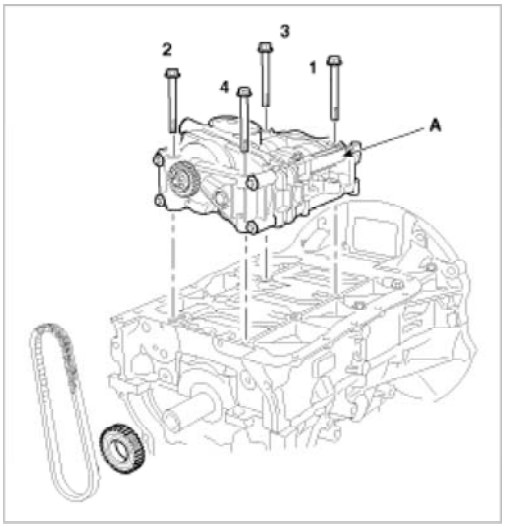

Bolting order

A. Assemble the bolts in order number as shown with seating torque 25.5 N.m (2.6kgf.m, 18.8 lb-ft)
B. Unfasten the bolts as reverse bolting order. (4-3-2-1)
C. Assemble the bolts as specified bolting order in same increments as follows.

mcx30.com

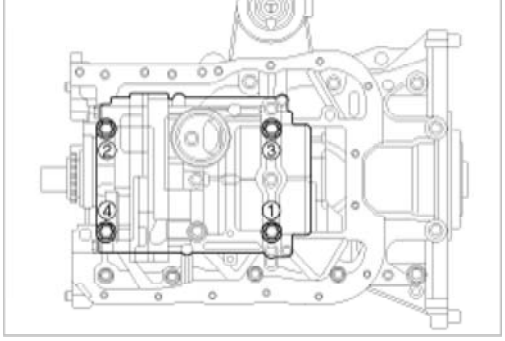

4. Remove the balance shaft chain guide (C).

Tightening torque :
9.8 ~ 11.8N.m (1.0 ~ 1.2kgf.m, 7.2 ~ 8.7lb-ft)

5. Install the balance shaft chain tensioner arm (B).

Tightening torque :
9.8 ~ 11.8N.m (1.0 ~ 1.2kgf.m, 7.2 ~ 8.7lb-ft)

6. Install the balance shaft chain hydraulic tensioner (A) then remove the stopper pin.

Tightening torque :
9.8 ~ 11.8N.m (1.0 ~ 1.2kgf.m, 7.2 ~ 8.7lb-ft)

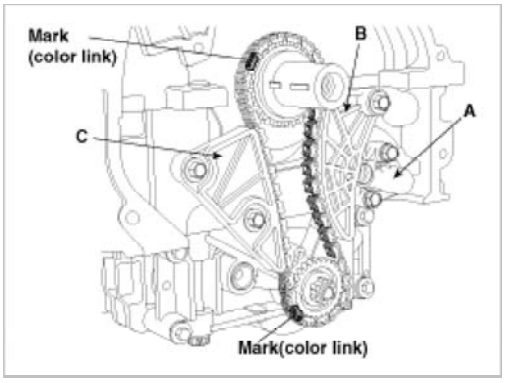

7. Confirm the timing marks.
8. Install the timing chain.
   (Refer to Timing system in this group)

[2.0L Engine only]

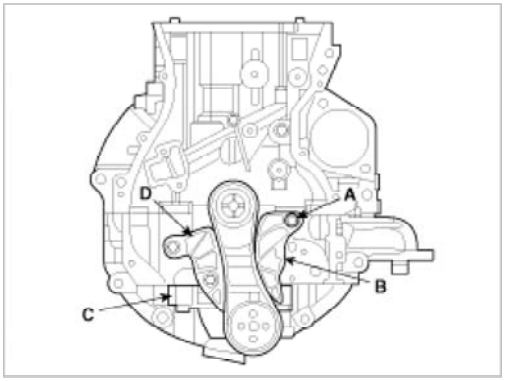

1. The key of crankshaft should be aligned with the mating face of main bearing cap. As a result of this, the piston of No.1 cylinder is placed at the top dead center on compression stroke.
2. Assemble the crankshaft sprocket on the crankshaft as the front mark on the crankshaft sprocket to be outward.

mcx30.com

then insert stopper pin to fix the tensioner(B).

Tightening torque :
9.8 ~ 11.8N.m (1.0 ~ 1.2kgf.m, 7.2 ~ 8.7lb.ft)

4. Assemble the oil pump chain on the crankshaft sprocket.
5. Assemble the oil pump assembly (C) on the ladder frame as placing oil pump sprocket in to oil pump.

Tightening torque :
7.8~11.8N.m (0.8~1.2kgf.m, 5.8~8.7lb.ft) + 17.7~21.6N.m (1.8~2.2kgf.m, 13.0~15.9lb.ft) + 27.5~31.4N.m (2.8~3.2kgf.m, 20.3~23.1lb.ft)

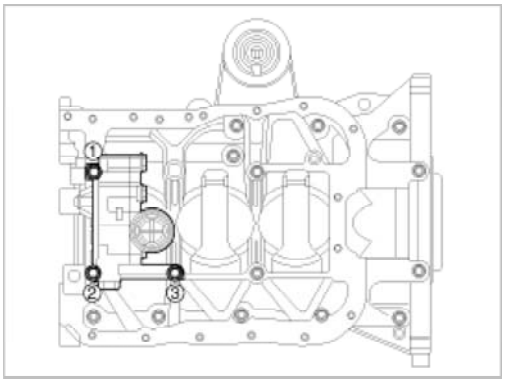

Bolting order

A. Assemble the bolts in order number as shown with seating torque 25.5 N.m (2.6kgf.m, 18.8 lb-ft)
B. Unfasten the bolts as reverse bolting order. (3-2-1)
C. Assemble the bolts as specified bolting order in same increments as follows.

6. Install the oil pump chain guide (D) then remove the stopper pin.

Tightening torque :
9.8 ~ 11.8N.m (1.0 ~ 1.2kgf.m, 7.2 ~ 8.7lb-ft)

Engine Mechanical System > Lubrication System > Oil Cooler > Repair procedures

Removal [2.4L Engine only]

1. Loosen the drain plug, and drain the coolant. Remove the radiator cap to speed draining.
2. Disconnect the oil cooler coolant hoses (A).

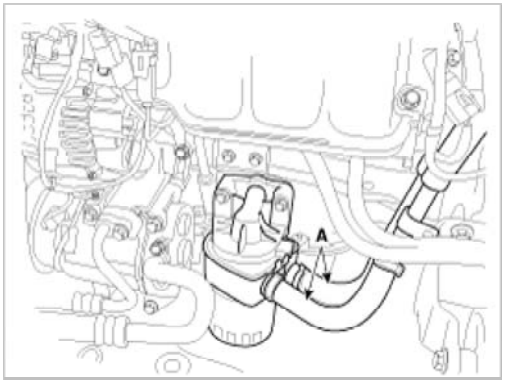

3. Remove the oil filter (A).

mcx30.com

4. Loosen the mounting bolt (A) and remove the oil cooler assembly (B).

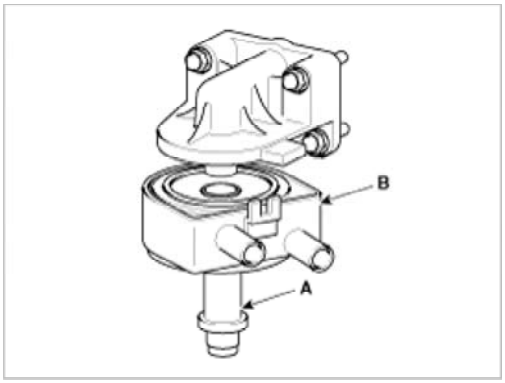

Installation [2.4L Engine only]

1. Apply a light coat of engine oil to the oil cooler packing surface (A), and then Install the oil cooler with fix bolt (B).

Tightening torque:
44.1 ~ 53.9 N.m (4.5 ~ 5.5 kgf.m, 32.5 ~ 39.8 lb-ft)

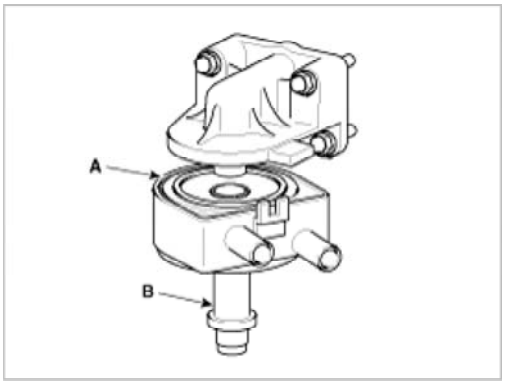

CAUTION

Fix position of oil cooler stopper(A) where oil cooler resists on ladder frame stopper (B).

mcx30.com

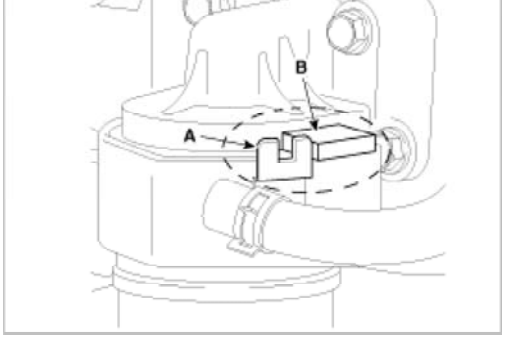

2. Apply a light coat of engine oil to the oil filter packing surface (A), and then install the oil filter.

Tightening torque:
11.8 ~ 15.7 N.m (1.2 ~ 1.6 kgf.m, 8.7 ~ 11.6 lb-ft)

3. Connect the oil cooler coolant hoses (B).

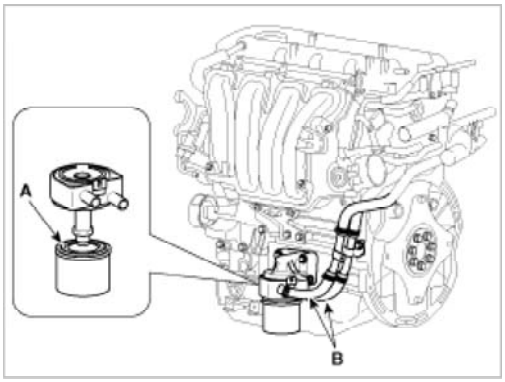

4. Fill the radiator with coolant and check for leaks.

Engine Mechanical System > Lubrication System > Engine Oil > Repair procedures

Replacement

CAUTION

- Prolonged and repeated contact with mineral oil will result in the removal of natural fats from the skin, leading to dryness, irritation and dermatitis. In addition, used engine oil contains potentially harmful contaminants which may cause skin cancer.
- Exercise caution in order to minimize the length and frequency of contact of your skin to used oil. Wear protective clothing and gloves. Wash your skin thoroughly with soap and water, or use water-less hand cleaner, to remove any used engine oil. Do not use gasoline, thinners, or solvents.
- In order to preserve the environment, used oil and used oil filter must be disposed of only at designated disposal sites.

1. Drain the engine oil.
   (1) Remove the oil filler cap.
   (2) Remove the oil drain plug, and drain the oil into a container.

2. Replace the oil filter.
   (1) Remove the oil filter cover (A).

mcx30.com

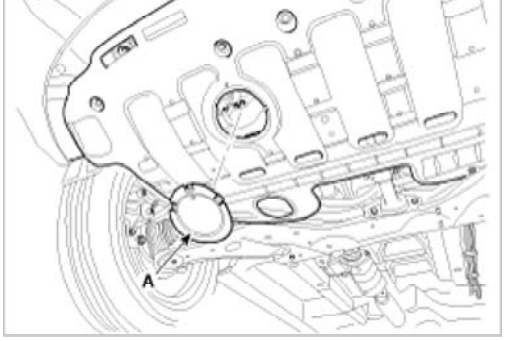

(2) Remove the oil filter.

(3) Check and clean the oil filter installation surface.

(4) Check the part number of the new oil filter is as same as old one.

(5) Apply clean engine oil to the gasket of a new oil filter.

(6) Lightly screw the oil filter into place, and tighten it until the gasket contacts the seat.

(7) Tighten it with the torque below.

Tightening torque :
11.8 ~ 15.7N.m (1.2 ~ 1.6kgf.m, 8.7 ~ 11.6lb-ft)

3. Refill with engine oil.
   (1) Clean and install the oil drain plug with a new gasket.

Tightening torque :
34.3 ~ 44.1N.m (3.5 ~ 4.5kgf.m, 25.3 ~ 32.5lb-ft)

   (2) Fill with fresh engine oil.

Capacity : [2.0(NON BSM) / 2.4(BSM)]
Total : 4.7 L (4.97US qt, 4.13Imp qt) / 5.5L (5.81US qt, 4.84Imp qt)
Oil pan : 3.8L (4.01US qt, 3.34Imp qt / 4.2L (4.44US qt, 3.69Imp qt)
Drain and refill including oil filter : 4.1L (4.33US qt, 3.61Imp qt) / 4.6L (4.86US qt, 4.05Imp qt)

   (3) Install the oil filler cap.

4. Start engine and check for oil leaks and check the oil gauge or light for an indication of oil pressure.
5. Recheck the engine oil level.

Inspection

1. Check the engine oil quality.
   Check the oil deterioration, entry of water, discoloring of thinning. If the quality is visibly poor, replace the oil.
2. Check the engine oil level.
   After engine warm up stop the engine wait 5 minutes then check the oil level.
   Oil level should be befween the "L" and "F" marks on the dipstick.
   If low check for leakage and add oil up to the "F" mark.

NOTE

Do not fill with engine oil above the "F" mark.

Selection Of Engine Oil

Recommendation : 5W-20/GF4&SM (If not available, refer to the recommended API or ILSAC classification
API classification: SL, SM or above
ILSAC classification : GF3, GF4 or above
SAE viscosity grade : Refer to the recommended SAE viscosity number

mcx30.com

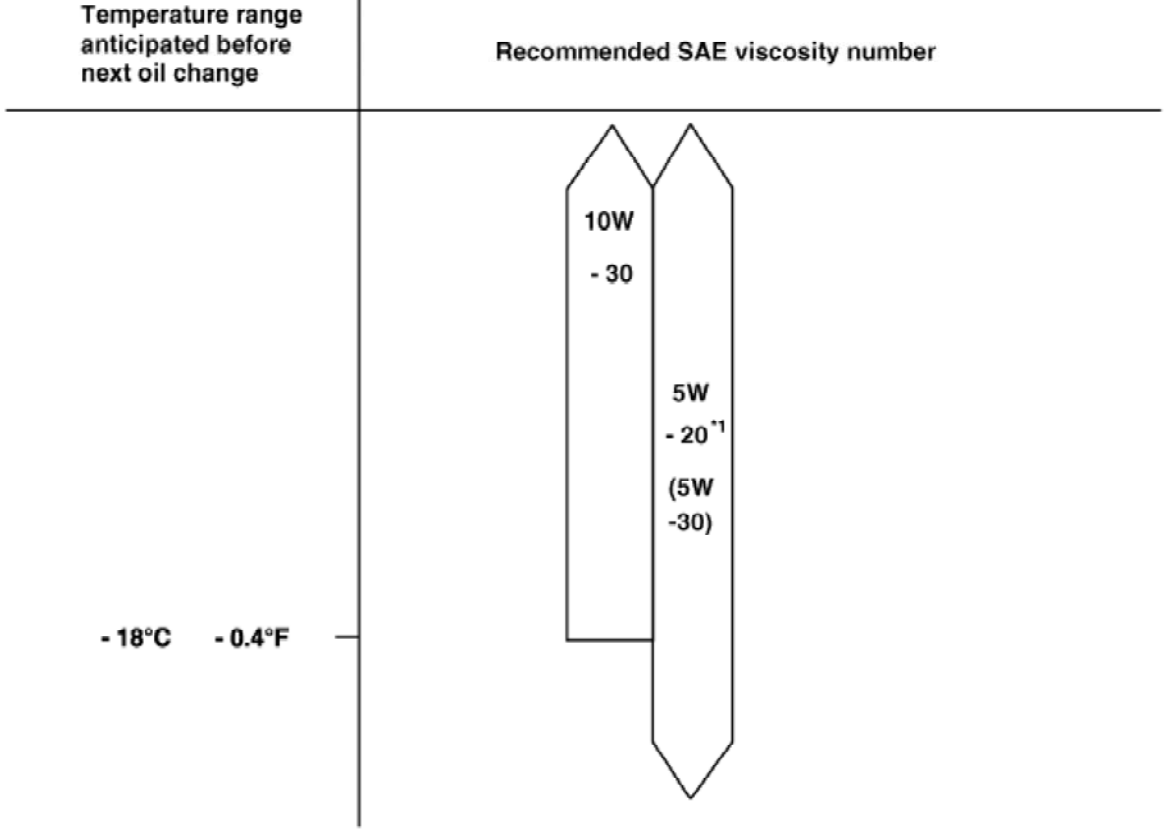

*1 If 5W-20 / GF4 engine oil is not available, 5W-30 or secondary recommended engine oil for corresponding temperature range can be used.

NOTE

For best performance and maximum protection of all types of operation, select only those lubricants which :

1. Satisfy the requirement of the API or ILSAC classification.
2. Have proper SAE grade number for expected ambient temperature range.
3. Lubricants that do not have both an SAE grade number and API or ILSAC service classification on the container should not be used.

Engine Mechanical System > Lubrication System > Oil Pressure Switch > Repair procedures

Inspection

1. Check the continuity between the terminal and the body with an ohmmeter.
   If there is no continuity, replace the oil pressure switch.

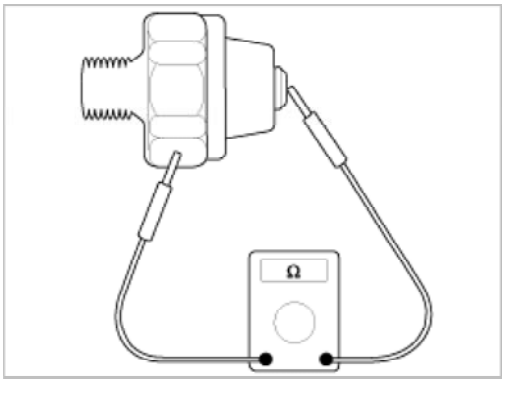

2. Check the continuity between the terminal and the body when the fine wire is pushed. If there is continuity even when

mcx30.com

3. If there is no continuity when a 50kpa (7psi) is applied throgh the oil hole, the switch is operaing properly. Check for air leakage. If air leaks, the diaphragm is broken. Replace it.

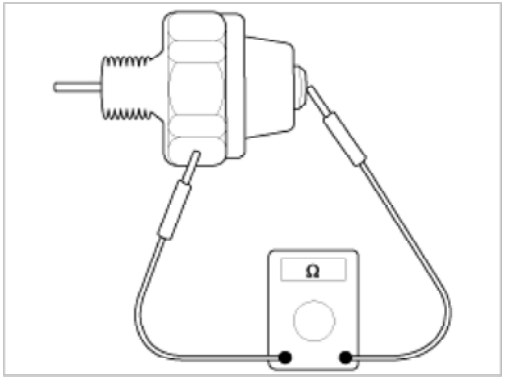

Engine Mechanical System > Intake And Exhaust System > Intake Manifold > Components and Components Location

Components

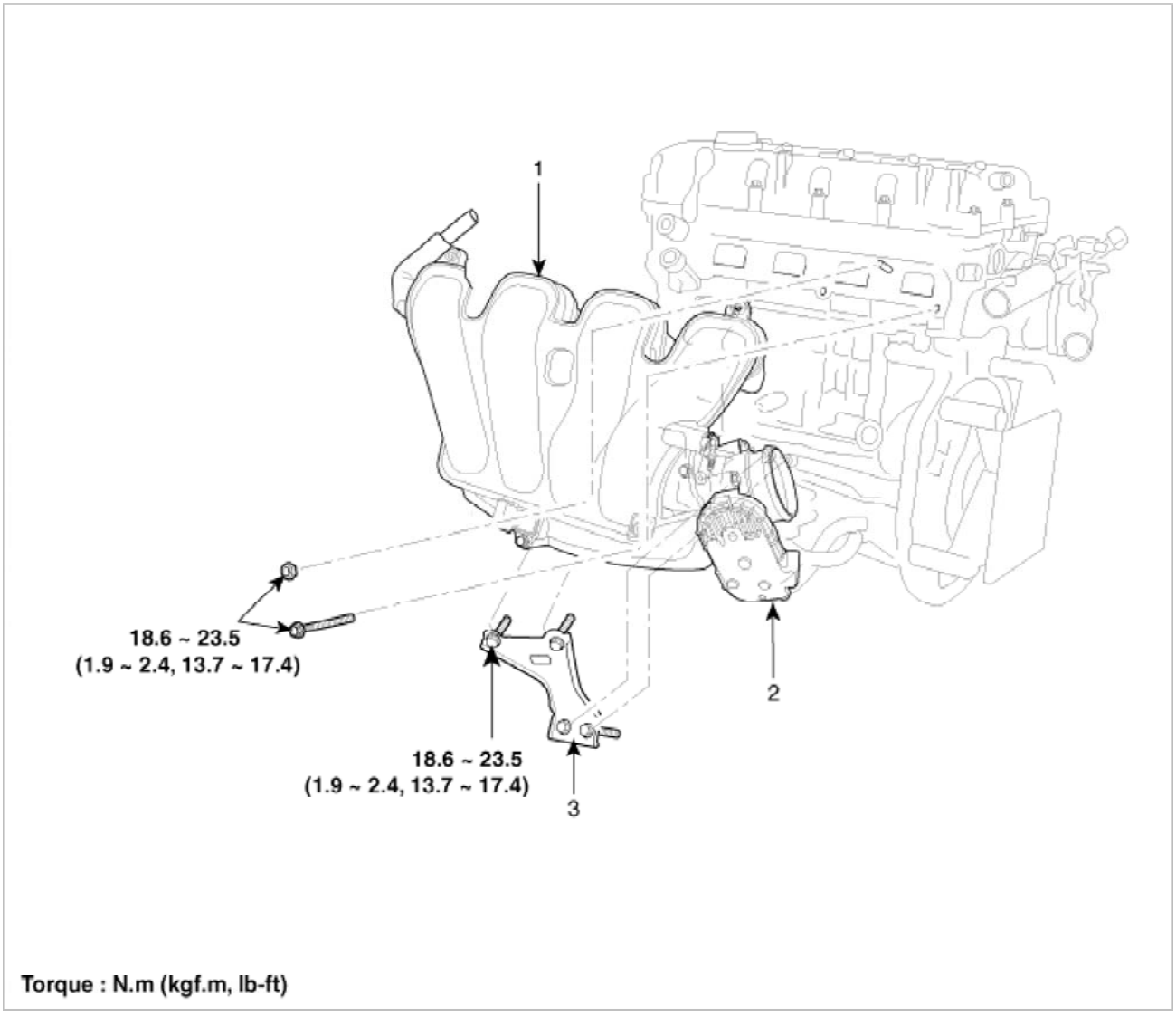

1. Intake manifold assembly 2. Electronic throttle body	3. Intake manifold stay

mcx30.com

Removal and Installation

1. Disconnect the battery negative terminal (A).

Tightening torque:
(-) terminal : 4.0 ~ 6.0N.m (0.4 ~ 0.6kgf.m, 3.0 ~ 4.4lb-ft)

2. Remove the engine cover (B).
3. Remove the air duct (C).

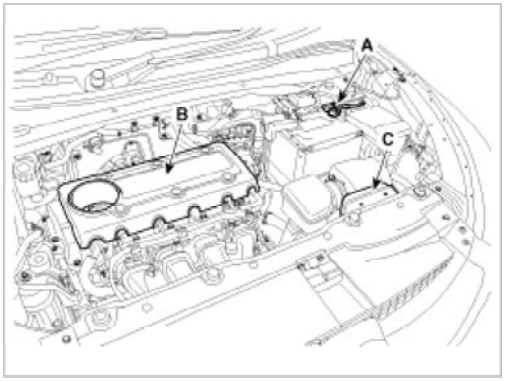

4. Disconnect the breather hose (A), air intake hose (B) and then remove the air cleaner assembly (C).

Tightening torque
Hose clamp bolt:
2.9 ~ 4.9N.m (0.3 ~ 0.5kgf.m, 2.2 ~ 3.6lb-ft)
Air cleaner assembly bolts:
7.8 ~ 11.8N.m (0.8 ~ 1.2kgf.m, 5.8 ~ 8.7lb-ft)

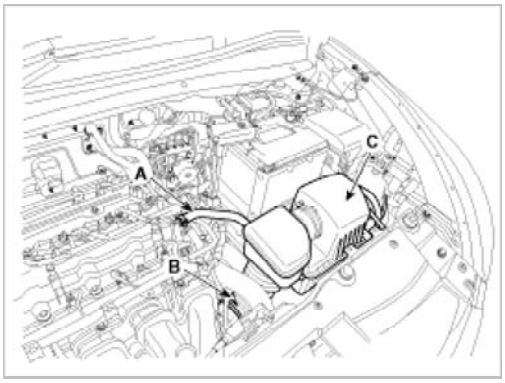

5. Loosen the drain plug (A), and drain the coolant. Remove the radiator cap to speed draining.

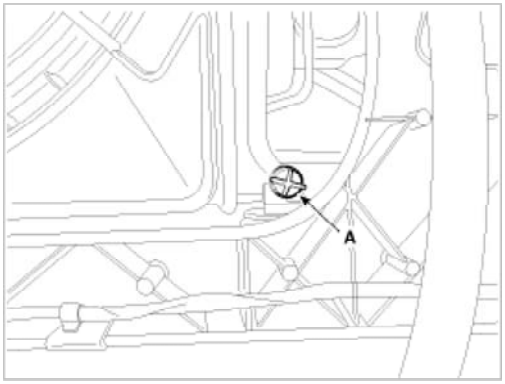

6. Remove the radiator upper hose (A).

mcx30.com

7. Disconnect the OCV connector (A).

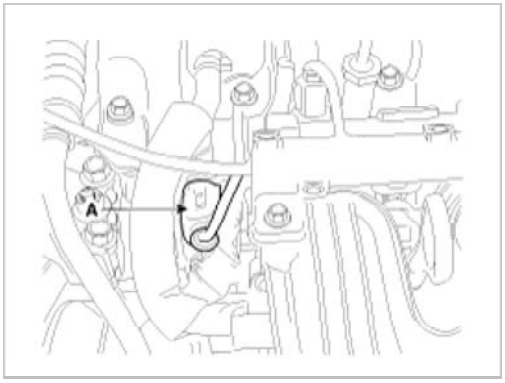

8. Disconnect the VIS connector (A), the oil pressure switch (B), the knock sensor connector (C), the A/C compressor switch connector (D) and the alternator connector (E).

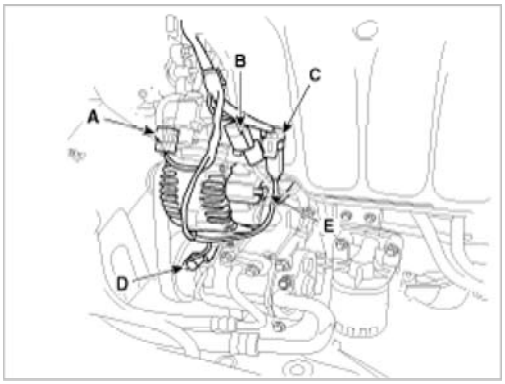

9. Disconnect the Injector connectors (A).

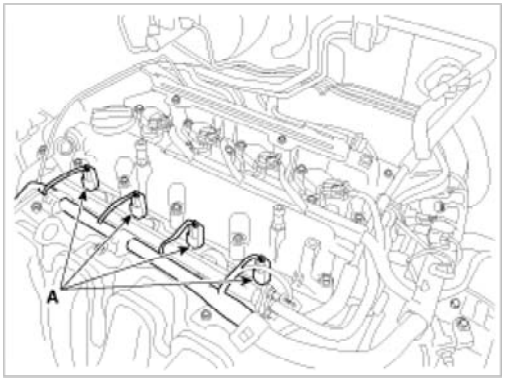

10. Disconnect the VCM connector (A).

mcx30.com

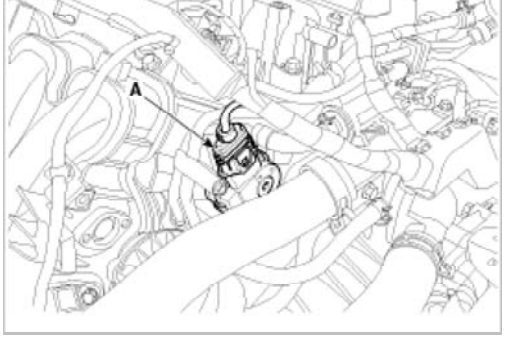

11. Disconnect the ETC connector (A) and the MAP & IATS connector (B).

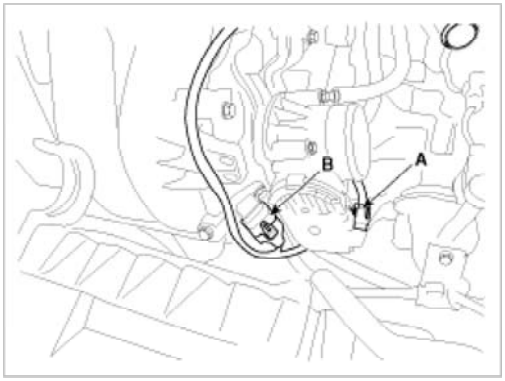

12. Disconnect the PCV hose (A).

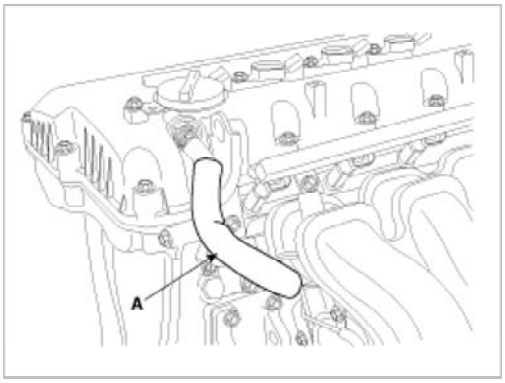

13. Disconnect the fuel hose (A).

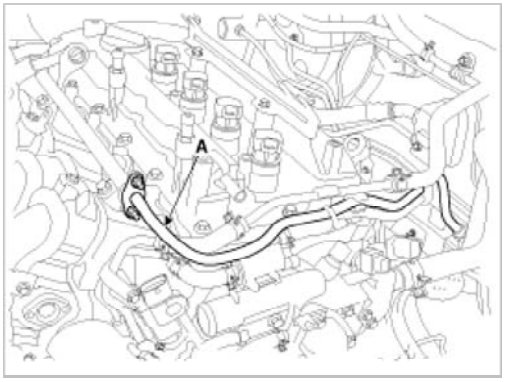

14. Disconnect the brake booster vacuum hose (A), PCSV hose (B) and the throttle body coolant hoses (C).

mcx30.com

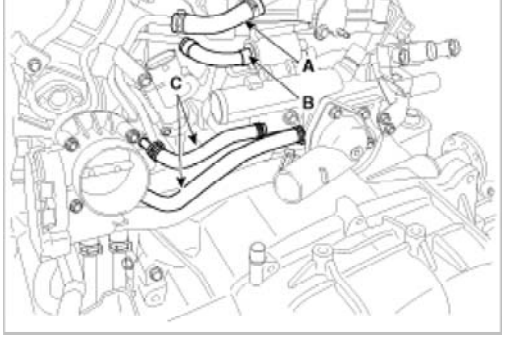

15. Remove the intake manifold stay (A) and then disconnect the sensor connectors from the mounting bracket.

Tightening torque :
18.6 ~ 23.5N.m (1.9 ~ 2.4kgf.m, 13.7 ~ 17.4lb-ft)

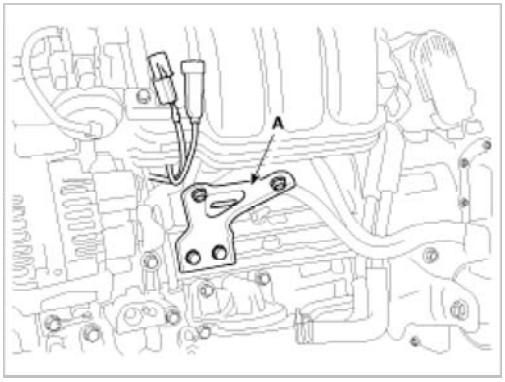

16. Remove the intake manifold (A).

Tightening torque :
Bolts & Nuts :18.6 ~ 23.5N.m (1.9 ~ 2.4kgf.m, 13.7 ~ 17.4lb-ft)

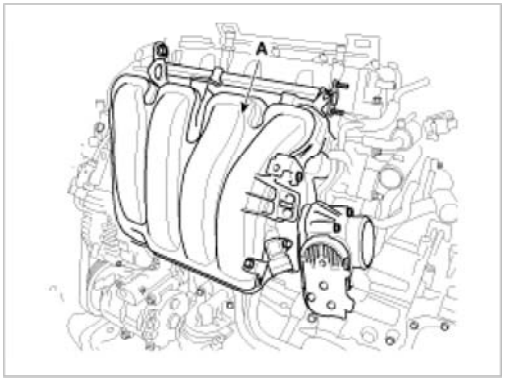

17. Installation is reverse order of removal.

Engine Mechanical System > Intake And Exhaust System > Exhaust Manifold > Components and Components Location

Components

mcx30.com

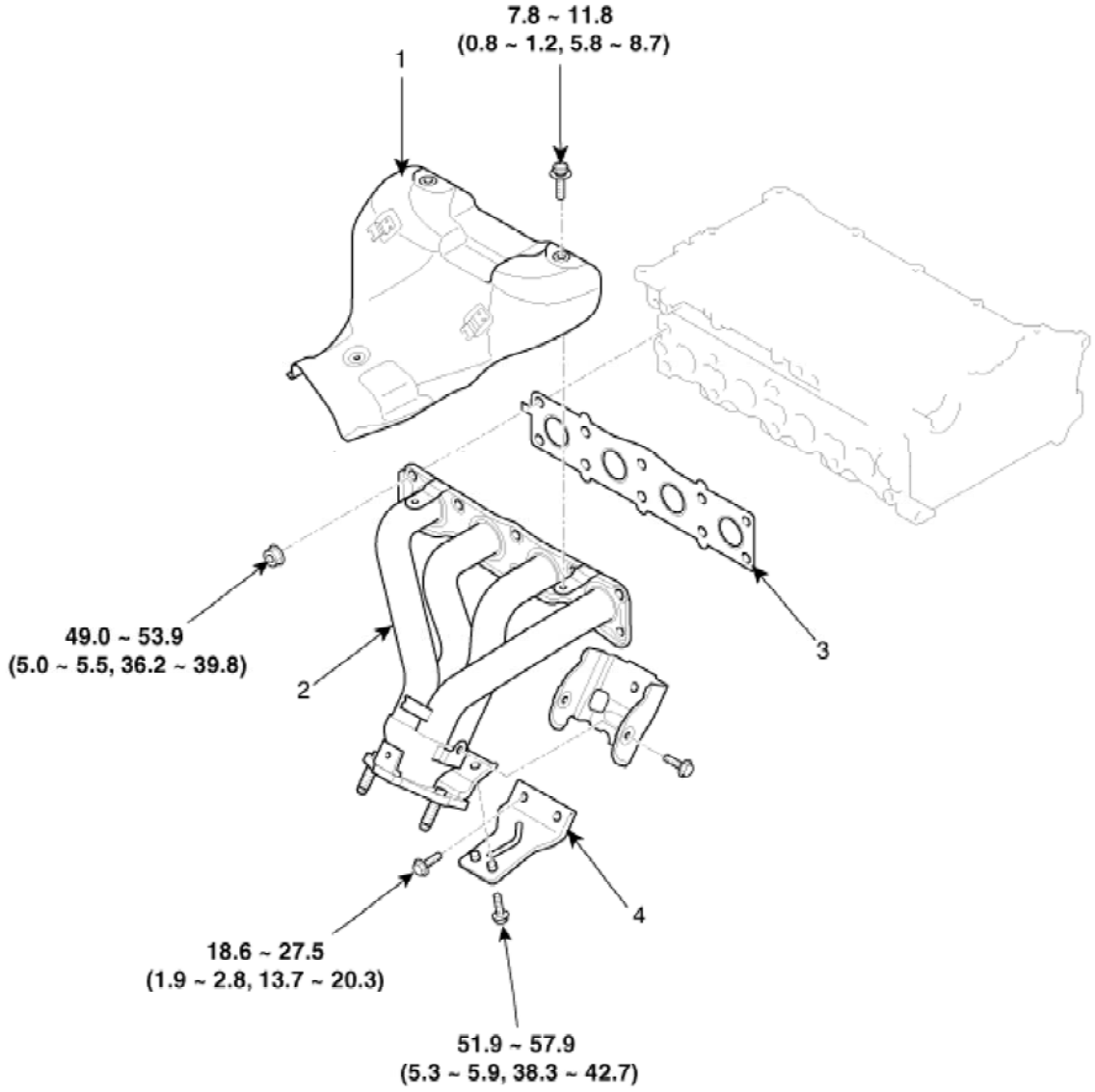

Torque : N.m (kgf.m, lb-ft)

1. Heat protector 2. Exhaust manifold	3. Exhaust manifold gasket 4. Exhaust manifold stay

Engine Mechanical System > Intake And Exhaust System > Exhaust Manifold > Repair procedures

Removal and Installation

1. Disconnect the battery negative terminal.

Tightening torque:
(-) terminal : 4.0 ~ 6.0N.m (0.4 ~ 0.6kgf.m, 3.0 ~ 4.4lb-ft)

2. Disconnect the oxygen sensor connector (A) and then remove the front muffler (B).

mcx30.com

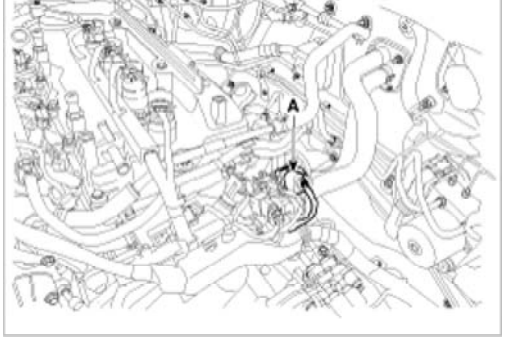

Tightening torque:
39.2 ~ 58.8 N.m (4.0 ~ 6.0 kgf.m, 28.9 ~ 43.4 lb-ft)

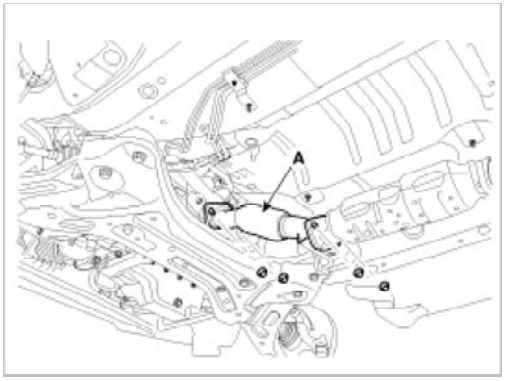

3. Remove the heat protector (A).

Tightening torque:
7.8 ~ 11.8N.m (0.8 ~ 1.2kgf.m, 5.8 ~ 8.7lb-ft)

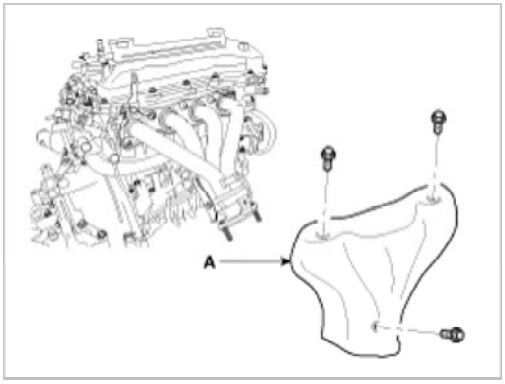

4. Remove the exhaust manifold stay and the remove the exhaust manifold (A).

Tightening torque:
Stay M8 bolt :
18.6 ~ 27.5 N.m (1.9 ~ 2.8 kgf.m, 13.7 ~ 20.3 lb-ft)
Stay M10 bolt :
51.9 ~ 57.9 N.m (5.3 ~ 5.9 kgf.m, 38.3 ~ 42.7 lb-ft)
Manifold nut:
49.0 ~ 53.9 N.m (5.0 ~ 5.5 kgf.m, 36.2 ~ 39.8 lb-ft)

5. Installation is reverse order of removal with a new manifold gasket.

Engine Mechanical System > Intake And Exhaust System > Muffler > Components and Components Location

mcx30.com

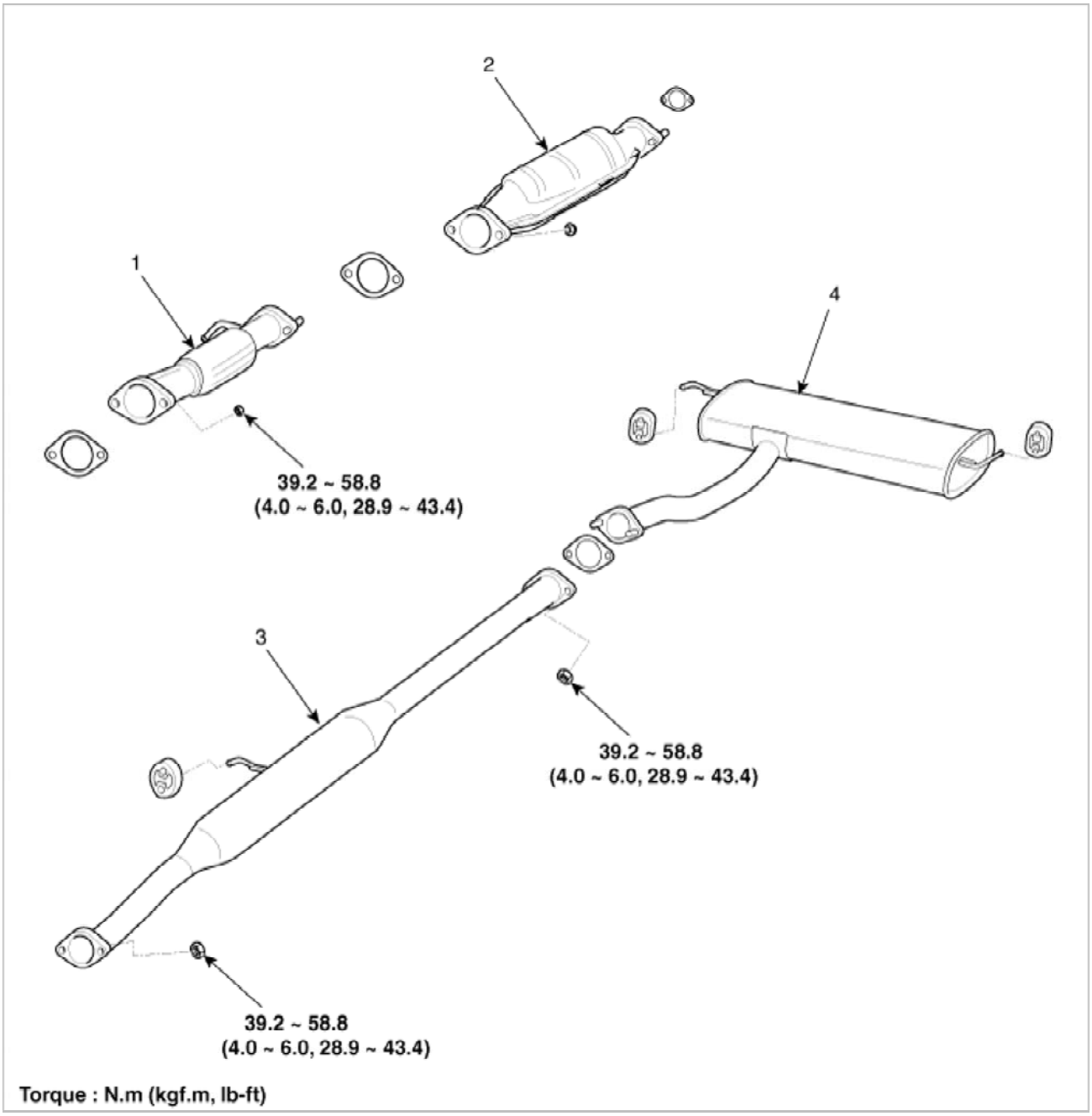

1. Front muffler 2. Catalytic converter	3. Center muffler 4. Main muffler

Engine Mechanical System > Intake And Exhaust System > Muffler > Repair procedures

Removal

1. Disconnect the oxygen sensor connector (A) and then remove the front muffler (B).

mcx30.com

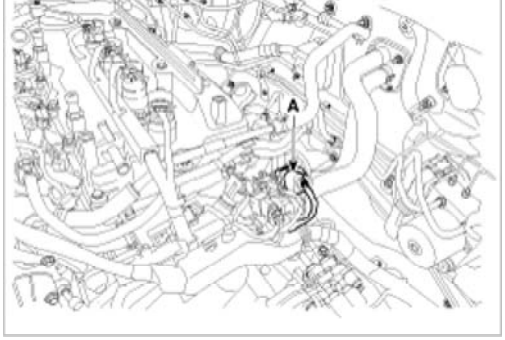

Tightening torque:
39.2 ~ 58.8 N.m (4.0 ~ 6.0 kgf.m, 28.9 ~ 43.4 lb-ft)

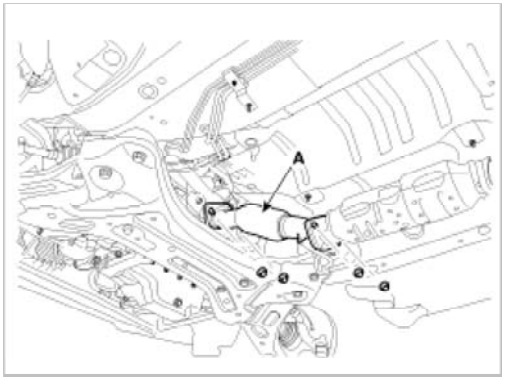

2. Remove the catalytic converter (A) and the center muffler (B).

Tightening torque:
39.2 ~ 58.8 N.m (4.0 ~ 6.0 kgf.m, 28.9 ~ 43.4 lb-ft)

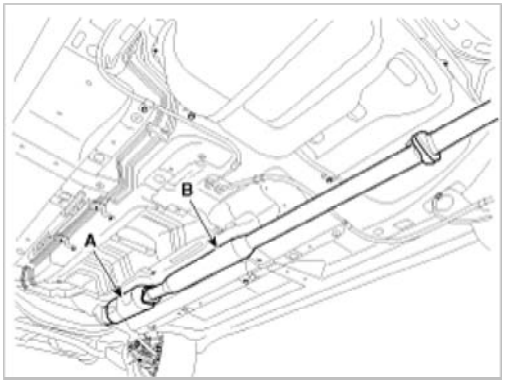

3. Remove the main muffler (A).

Tightening torque:
39.2 ~ 58.8 N.m (4.0 ~ 6.0 kgf.m, 28.9 ~ 43.4 lb-ft)

mcx30.com

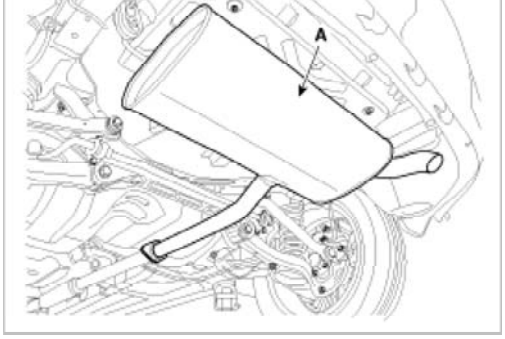

mcx30.com